10 GAUGE SECURITY VISION LITE: VLFS10 & VLFS10SP V13

Security & Detention Vision Frame - Optional Speaker Port. Accommodates Glazing 1/4-1-1/2" Including ArmrShield Bullet-Resistant Glass

SPECIFICATIONS:

Material:	10 gauge CRS frame and 10 gauge perforated steel panel. Min size 4" x 4", Max 60" x 104". See Fire Rating Below.
Construction:	1-1/4" trim with mitered and welded corners, countersunk mounting holes both sides, and 1" wide glazing retainer.
Door:	For 1 to 3" thick door. Specify door thickness: _____ **Door cutout = order size.**
Powder Coat Finishes:	____ **(B)** Mineral Bronze (standard color) ____ **(BK)** Black ____ **(FBK)** Flat Black ____ **(W)** White ____ **(R)** Red ____ **(SB)** SC Beige ____ **(SA)** Satin Aluminum ____ **(S)** Sand ____ **(AB)** AMS Beige ____ **(GH)** Gray Hammertone ____ **(G)** Gray Primer **Color Samples Online**
Fasteners:	#8 x 32 Torx head security binder bolt with blank head one side to match finish.
Glass:	_____**" Glass Thickness Will Be Used for this Order.** 1/4" - 1-1/2" glazing to be ordered separately from **Glazing Section** of catalog. Use fire rated glazing with Warnock Hersey (WHI) or UL classification markings for fire rated applications. Visible light is 2-1/2" under rough opening size. Specify glass above. Glass is 1/4" under order size. If glazing is being provided by a supplier other than Air Louvers, coordinate with the supplier to ensure compatibility with IG kits. ***Air Louvers Glazing to fit this vision frame: WS, PYRO, KFRL, DFRFU,SWISS 45, CONTRA 60, 90, ARMRSHIELD, LGSHIELD.***
Fire-Rating, Testing & Listings:	When installed in properly rated and approved door, ratings up to 3 hours can be achieved, depending on the glazing used. See glazing ratings for max exposed area. Tested and Listed for UL 10C and Criteria of UBC 7-2 Positive Pressure.

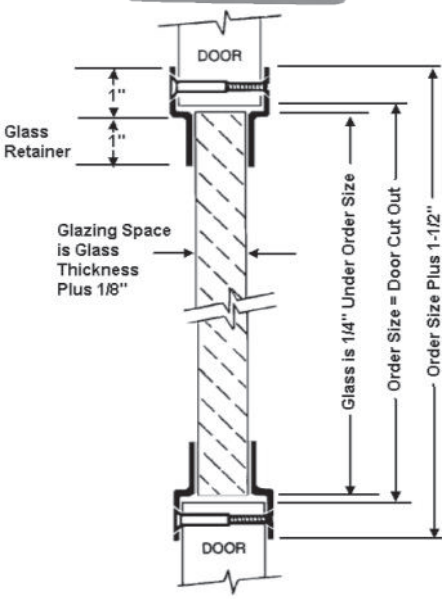

VLFS10

OPTIONS AT ADDITIONAL COST:

Finishes & Materials:	_____ **(G)** Galvanized Sheet for Exterior Applications. _____ **(EG)** Electro Zinc Plating for Maximum Corrosion Resistance. _____ Optional colors. Please provide color chip & contact Customer Service.
Fasteners:	_____ Hex head _____ Other: _____
Speaker Panel:	_____ **(S10SP)** 10 gauge CRS frame and 10 gauge perforated steel speaker panel with staggered holes. Speaker panel not fire, or pressure-rated.
Custom:	Smaller or larger sizes, or other options. Contact Customer Service for special orders.

S10SP With Optional Speaker Panel

Order Format: VLFS10 ____ ____ ____ ____ ____ **Example: VLFS10 1212G 1"**
Option G,EG W H Color Glass Thickness

Interpretation of Fire and Building Codes May Vary. Consult with the Local Authority Having Jurisdiction (AHJ) to determine appropriate standards.

AIR LOUVERS	**Distributor:**	**Width:** _____ **x Height:** _____
	Architect:	**Quantity:** **Door Thickness:**
	Contractor:	**Glass Thickness:**
	Project:	**Date:** **Version:** ALPDS1105

800-554-6077 QUOTES@ACTIVARCPG.COM ORDERS@ACTIVARCPG.COM SALES@AIRLOUVERS.COM **FAX:** 952-835-2218
VISIT WWW.ACTIVARCPG.COM **FOR THE MOST UPDATED PRODUCT INFORMATION** • **AN ACTIVAR CONSTRUCTION PRODUCTS COMPANY**
MANUFACTURING: COMMERCE CA, BLOOMINGTON, MN • **WAREHOUSES:** LANCASTER PA, ATLANTA GA, CHICAGO IL, SEATTLE WA