INSTALLATION INSTRUCTIONS: JL-DP & JL-C PIT FRAME & DRAIN PAN

Prepare for Installation

1. Locate the packing slip(s) and shop drawings.

2. Verify that all products listed on the packing slip are included in the package.

3. Check the products for damage. If products are damaged, report a freight claim immediately and leave the products in their packaging. If you sign for products without reporting damage you waive your right to a freight claim and will be responsible for their replacement cost.

4. Read the instructions thoroughly before beginning installation.

Install the Frame

A FLAT FLOOR AND ACCURATELY INSTALLED FRAMES ARE CRITICAL TO THE OVERALL PERFORMANCE OF THE MAT. AN IRREGULAR FLOOR SUFACE OR IMPROPERLY INSTALLED FRAME WILL CAUSE THE MAT TO BE NOISY AND SPONGY AND CAUSE TRIPPING HAZARDS.

1. There must be a recess for the grate that is deep enough to allow the cross supports to fit under the grate and be 6" wider and longer than the frame dimensions. This allows room to maneuver the frame, provides clearance for the anchor bolts and gives sufficient mortar strength to support the frame and grate assembly.

2. Install the 1/3"-20 x 3" anchor bolts in the frame channels. Space them at two-foot intervals on all sides of the frame.

3. Assemble the frame sections according to the shop drawings. Note that there are two types of frames, ledge and plain. The ledge pieces, which are used at the front and back of the grate, can serve as a screed for leveling the concrete. Insert the ¼-20 x 1" self-threading screws through the pre-punched holes in the plain sections of the frame and into the screw bosses on the ledge sections without tightening them completely. If there are cross supports, insert them between the plain side frame sections and attach them with the remaining screws. When the frame is completely assembled, finish tightening all of the screws. Install the support posts for the cross supports, if necessary, on the bottom of the supports as indicated in the shop drawings. **See page 2**

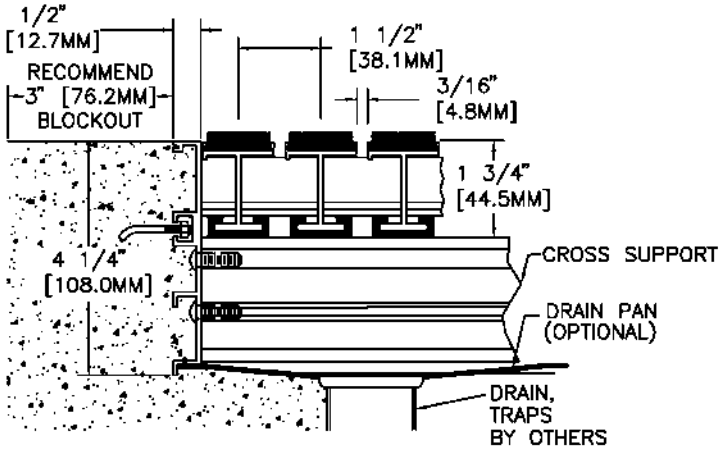

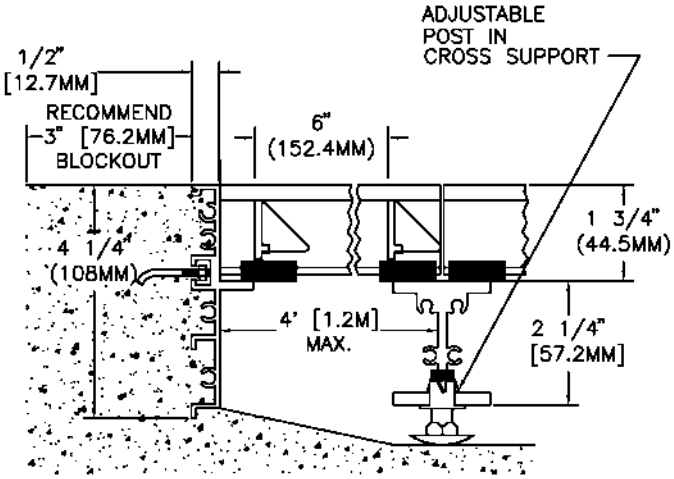

HEADQUARTERS & CUSTOMER SERVICE:4450 WEST 78TH ST CIRCLE, BLOOMINGTON, MN 55435-5416 **PH**: 800-554-6077 **FAX:** 952-835-2218 **EMAIL:** SALES@JLINDUSTRIES.COM WWW.ACTIVARCPG.COM
ACPG SOUTHEAST (THOMAS ENTERPRISES):FT MEYERS, FL, **ACPG WEST COAST (SAMSON):** COMMERCE, CA **WAREHOUSES:** DALLAS TX, LANCASTER PA, ATLANTA GA, CHICAGO, IL 10-26-2010

If optional drain pan is being used, follow step 4. If pan is not being used, skip to step 5.

4. Lay the assembled frame upside down on a level surface. Lay the pan sections on the bottom of the frame in on the ledge. Place the 1/8” x ½” aluminum reinforcement strip on top of the pan material, one section at a time. Attach the strap and pan assembly to the frame with the 1/8” pop rivets. Rivet the pan sections together if necessary and caulk all seams and rivets.

5. Place the assembled frame into the opening and shim as necessary to level the frame to the height of the floor surface. Make any drain or trap connections.

6. Place the assembled frame into the opening at the desired location. Shim as necessary to level the frame to the height of the finished floor.

7. Pour cement mortar around edges of the frame and trowel in sufficient amount so that it will provide proper support for the frame and grate.

Install the Grate

1. Clean the recess, frame and cross supports. Debris or other irregularities in the frame and cross supports will cause the grate to rattle, feel spongy and cause a tripping hazard. The frame must be flat within 1/8” over 10’.

2. Refer to the shop drawings to determine the correct locations of the grate sections. Note that grates must be in the proper location, with all sections facing the same direction. The triangular keylock holes will all point the same direction when installed properly.

3. Move the cushions so that they rest directly on the cross supports and ledge frame.

4. Place grates on the cross supports and make sure the grates sit flat.

5. Adjust the cushions as necessary.

6. Save the installation and maintenance instructions and include them in the closeout documentation for the owner and maintenance personnel.

Continued maintenance is critical to the long term safety and performance of the grate. Remove the grate and clean the recess, frame and cross supports beneath it periodically to prevent the surface from becoming uneven. If dirt builds up, the grate will rattle, feel spongy and become a tripping hazard.

Follow the tread maintenance instructions included with this package to ensure the long life of the grate tread. If treads becomes damaged, contact JL for replacement information.