SUBMITTAL: 7900 SERIES FX OLYMPUS AED & OXYGEN CABINET

Description: 7900 Series is Designed to Accommodate Most AED's on the Market Today with room for an Oxygen Tank. Recessed Models are ADAC-Compliant . Select from Steel, Stainless Steel or Aluminum Construction.

Trim Construction: CRS with white powder-coat finish, #4 brushed stainless steel or clear anodized aluminum. 1-3/4" trim on face.

Door: Formed door with 1-3/4" trim, mounted in a 5/8" door stop with zinc-plated handle and roller catch and continuous hinge. All models feature a clear acrylic window with graphics, zinc-plated handle and roller catch.

Trim Style & Depth: *Recessed* – 3/8" flat trim, *Semi*-Recessed – 1-1/2" square edge or 3" rolled edge. *Surface-mount* has a square edge.

Alarm: 85 db Commander (audible) alarm standard.

Oxygen: Accommodates up to "D" size cylinder. See options below.

Tub: The double tub is constructed of cold rolled steel with white powder-coat finish standard. Shelf is 15-1/2" from top. Fire-resistant material is sandwiched between the layers of steel.

7913F12 Surface Mounted Cabinet

Fire-Rating: The recessed and semi-recessed Fire-FX™ cabinets are fabricated in accordance with the Warnock Hersey label for one and two hour combustible and non-combustible wall system building codes. The fire testing has met the requirement of the UBC standard 43-6 and ASTM-83 for membrane and penetration firestops. Installation instructions must be strictly adhered to in order to obtain the fire rating. The installation of any fire-rated cabinet which lacks a cabinet door or a condition in which the door is left ajar, will void the fire rating.

TRIM & DOOR MATERIAL & SERIES #							TUB I.D.			FRAME O.D.		WALL OPENING FIRE RATED		
QTY	STEEL	QTY	ALUMINUM	QTY	STAINLESS STEEL	TRIM STYLE	A	B	C	E	F	W	H	D
	7915F12		7925F12*		7935F12	Flat Trim	14"	37"	7"	17-1/2"	41-3/8"	16"	39-1/8"	* 7"
	7916F12		7926F12*		7936F12	1-1/2" Square	14"	37"	7""	17-1/2"	41-3/8"	16"	39-1/8"	* 6-3/8"
	7917F12		7927F12*		7937F12	3" Rolled	14"	37"	7""	17-1/2"	41-3/8"	16"	39-1/8"	* 5"

*** Add 5/8" to depth of wall opening for Aluminum Cabinets**

Optional Features at Additional Cost:

- ☐ (SA) Siren Strobe Alarm and 85 db Alarm
- ☐ (14STC) Saf-T-Clasp for Visual Notification When Door has been opened
- ☐ Custom Door Graphics - Contact customer service
- ☐ AED Wall Signs - See separate submittal
- ☐ Patented T^xO^2 oxygen system that features easy-to-use automatic flow system.
- ☐ Bronze or Brass Finish
- ☐ (14MAG) Magnetic Door Contact for Existing Alarm Systems
- ☐ (14RR) Roller Reed Ball Contact for Existing Alarm Systems
- ☐ Custom Colors or Sizes (Provide Paint Chip)

JL INDUSTRIES

ACTIVAR INC. Construction Products Group www.activarcpg.com

Distributor:	Quantity:
Contractor:	Approved By:
Model #:	Architect:
Project:	Date:

HEADQUARTERS & CUSTOMER SERVICE:4450 WEST 78TH ST CIRCLE, BLOOMINGTON, MN 55435-5416 **PH**: 800-554-6077 **FAX:** 952-835-2218 **EMAIL:** SALES@JLINDUSTRIES.COM WWW.ACTIVARCPG.COM
ACPG SOUTHEAST (THOMAS ENTERPRISES): FT MYERS, FL **ACPG WAREHOUSES:** COMMERCE CA **(SAMSON MFG),** DALLAS TX, LANCASTER PA, ATLANTA GA, SEATTLE WA 3-22-2011

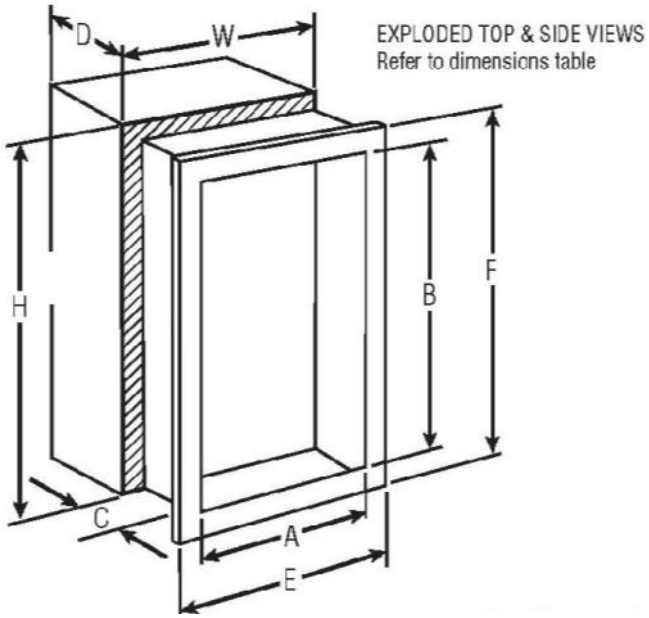

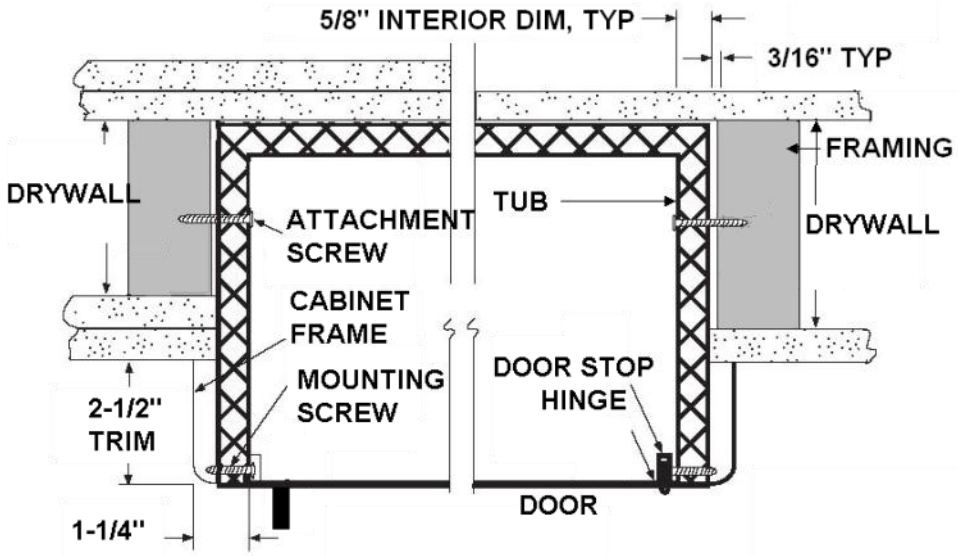

TYPICAL FIRE-RATED INSTALLATION

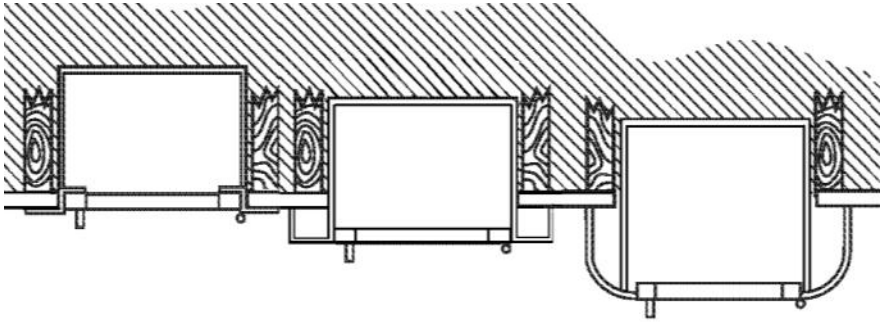

3/8" (.9cm) FLAT TRIM

1-1/2" (3.8cm) SQUARE TRIM

3" (7.6cm) ROLLED EDGE