SUBMITTAL: FLUSH VINYL CORNER GUARD SYSTEMS 1 & 2 HOUR FIRE-RATED: SGVAF CORNER GUARD

Construction: Continuous aluminum retainer Type 6063-T5, mill finish, .062" (1.57mm) thick. High-impact vinyl acrylic cover .078" (1.98mm) thick. In accordance with ASTM 4226 and ASTM D256.
Fire-Rated Insulation: 1 or 2 hour fire-rated material is adhered to the wall side of the corner guard.
Length: 48" standard". Up to 20'.
Wing Length: 2" and 3" with 13/16" tapered wallboard bead for taping over the frame edges.
Angle: 90° (2" & 3" wing), 135° (3" wing).
Aluminum Cove Base: 4"[101.6mm] high, unless otherwise specified.
Corner Type: Square (S), Radius (R) or Endwall (EW).
Mounting: Installed with screws through aluminum retainer to wallboard surface.
Flame Resistance: Meet Class 1/A requirements for flame spread and smoke density.

SGVAF1S

SGVAF1R

Vinyl Corner Guard System for Flush Mount: SGVAF Fire Rated Series						
QTY	1 HOUR MODEL	QTY	2 HOUR MODEL	ANGLE	CORNER	WING
	SGVAF1R-90-2		SGVAF2R-90-2	90	Radius	2"
	SGVAF1S-90-2		SGVAF2S-90-2	90	Square	2"
	SGVAF1-EW-2		SGVAF2-EW-2	90	U	2"
	SGVAF1R-90-3		SGVAF2R-90-3	90	Radius	3"
	SGVAF1S-90-3		SGVAF2S-90-3	90	Square	3"
	SGVAF1-EW-3		SGVAF2-EW-3	90	U	3"
	SGVAF1-135-3		SGVAF2-135-3	135	Std	3"

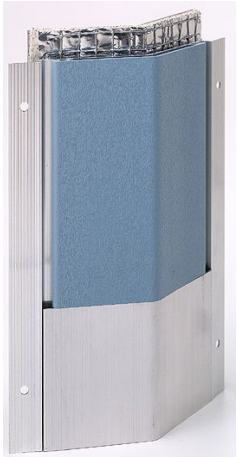

SGVAF1-135-3

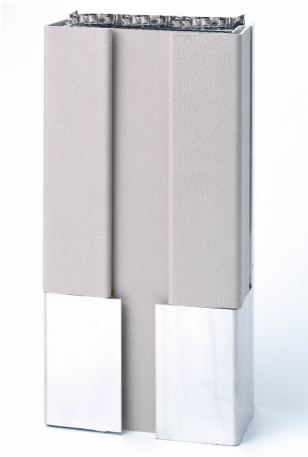

SGVAF1-EW

JL INDUSTRIES — A DIVISION OF ACTIVAR INC. Construction Products Group www.activarcpg.com	Distributor:	Quantity:
	Contractor:	Approved By:
	Model #:	Architect:
	Project:	Date:

HEADQUARTERS & CUSTOMER SERVICE: 4450 WEST 78TH ST CIRCLE, BLOOMINGTON, MN 55435-5416 **PH:** 800-554-6077 **FAX:** 952-835-2218 **EMAIL:** SALES@JLINDUSTRIES.COM WWW.ACTIVARCPG.COM
ACPG SOUTHEAST (THOMAS ENTERPRISES): FT MEYERS, FL, **ACPG WEST COAST (SAMSON):** COMMERCE, CA **WAREHOUSES:** DALLAS TX, LANCASTER PA, ATLANTA GA, CHICAGO, IL 9-30-2010

SUBMITTAL: SGVAF CORNER GUARD

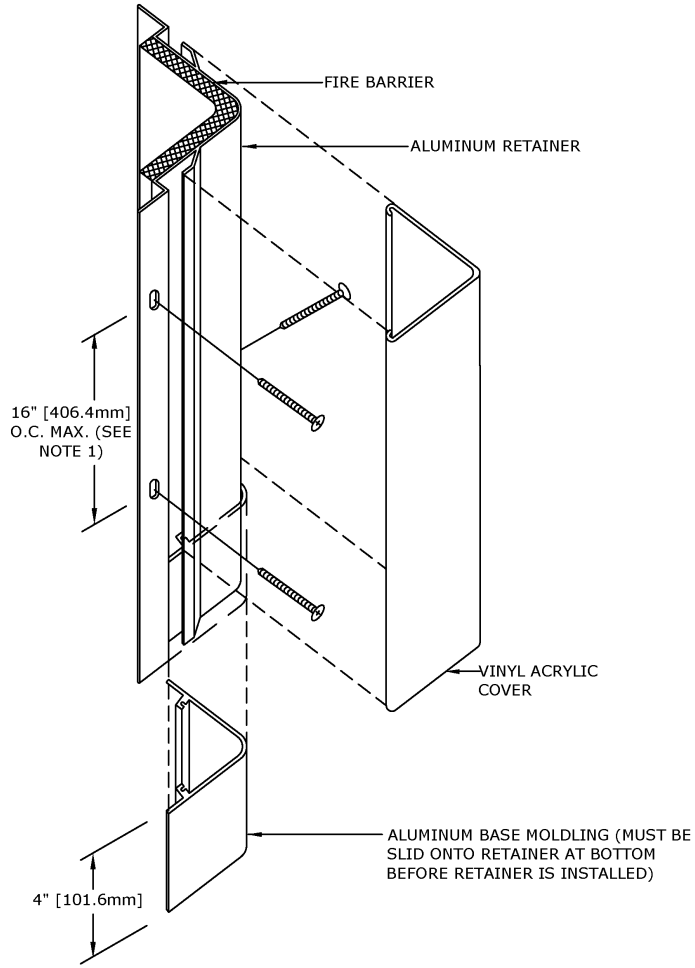

NOTES:
1. FACTORY-DRILLED FASTENER HOLES ON RETAINER LEGS ARE STAGGERED 8" [203.2mm] O.C. MAX. (HOLES ON EACH LEG ARE SPACED 16" [406.4mm] O.C. MAX.)

1 HOUR WALL INSTALLATION

1 LAYER GYP. BD.	2 LAYERS GYP. BD.	GYP. BD. & MASONRY
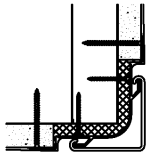 #6 x 2" DRYWALL SCREW	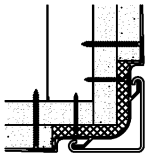 #6 x 2" DRYWALL SCREW	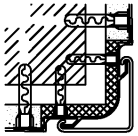 #6 X 1-1/2" S.M. SCREW AND TYPE AF5 ALLIGATOR ANCHORS BY MECHANICAL PLASTICS
QTY:	QTY:	QTY:

2 HOUR WALL INSTALLATION

2 LAYERS GYP. BD.	GYP. BD. & MASONRY
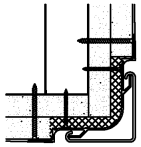 #6 x 2" DRYWALL SCREW	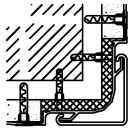 #6 X 1-1/2" S.M. SCREW AND TYPE AF5 ALLIGATOR ANCHORS BY MECHANICAL PLASTICS
QTY:	QTY:

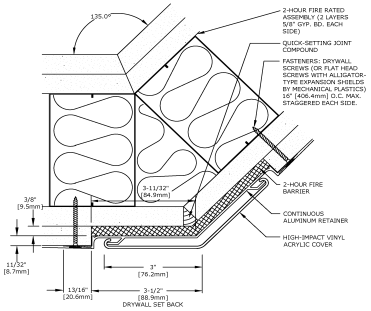

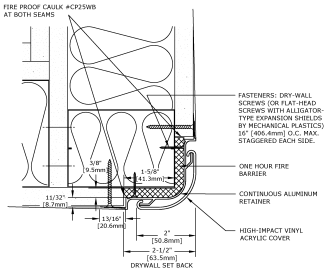

JL INDUSTRIES

A DIVISION OF ACTIVAR INC. www.activarcpg.com Construction Products Group

INSTALLATION DETAIL DRAWING AND TYPICAL FASTENING CONDITIONS FOR SGVAF CORNER GUARD

HEADQUARTERS & CUSTOMER SERVICE:4450 WEST 78TH ST CIRCLE, BLOOMINGTON, MN 55435-5416 **PH**: 800-554-6077 **FAX:** 952-835-2218 **EMAIL:** SALES@JLINDUSTRIES.COM WWW.ACTIVARCPG.COM
ACPG SOUTHEAST (THOMAS ENTERPRISES):FT MEYERS, FL, **ACPG WEST COAST (SAMSON):** COMMERCE, CA **WAREHOUSES:** DALLAS TX, LANCASTER PA, ATLANTA GA, CHICAGO, IL 9-30-2010