SUBMITTAL: PANORAMA ALUMINUM FX FIRE-RATED EXTINGUISHER CABINETS

The Academy Series Features Aluminum Trim and Door, with 14 Door Styles & Optional Anodized Colors.

Door & Trim Construction: Clear anodized aluminum. Flush cabinet doors with a 5/8" door stop are attached by a continuous hinge and equipped with zinc-plated handle and roller catch. All models have 1-3/4" trim on face and door.

Trim Style & Depth: *Recessed* 3/8" flat trim, *Semi Recessed* - 1-1/4", 1-1/2" Square Edge or 2-1/2", 3", 4", 4-1/2" Rolled Edge (4" has recessed ADAC pull). *Surface-mount* models have a square edge.

Tub: The double tub is constructed of cold rolled steel with white powder-coat finish standard. Tub forms a flange to cover cut edges of wallboard material. Fire-resistant material is sandwiched between the layers of steel.

Fire-Rating: The recessed and semi-recessed Fire-FX™ cabinets are fabricated in accordance with the Warnock Hersey label for one and two hour combustible and non-combustible wall system building codes. The fire testing has met the requirement of the UBC standard 43-6 and ASTM-E814-83 for membrane and penetration firestops. Installation instructions must be strictly adhered to in order to obtain the fire rating. The installation of any fire-rated cabinet which lacks a cabinet door or a condition in which the door is left ajar, will void the fire rating.

1822P48FX

4" Rolled Trim with Standard ADA Pull

Semi-Recessed

8127Q42FX
2-1/2" Rolled Trim
Semi-Recessed with Saf-T-Lok™

1826C70FX
101/2" Square Trim
Semi-Recessed

STEP 1: SELECT MODEL NUMBER , MATERIAL AND QUANTITY ON CHART (refer to chart on pg 2)

A. Determine Trim Style according to wall depth. **B.** Determine Tub I.D. according to size most suited for extinguisher and wall

STEP 2: SELECT DOOR ACRYLIC WITH HANDLE (Check one box below)

- ☐ **C70** Clear 3/16" Unlettered Smooth Acrylic
- ☐ **C71** Clear 3/16" Unlettered Smooth Acrylic & Saf-T-Lok™
- ☐ **P** Identity: 3/16" Textured Obscure Acrylic with Lettering
- ☐ **Q** Identity: 3/16" Textured Obscure Acrylic with Lettering & Saf-T-Lok™

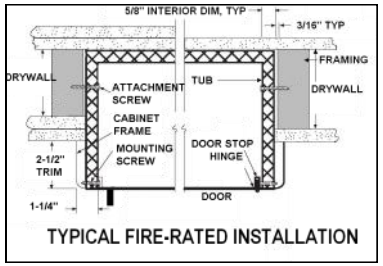

TYPICAL FIRE-RATED INSTALLATION

STEP 3 - P&Q DOORS SELECT LETTERING STYLE View lettering styles on page 2 or: VIEW LETTERING STYLES

☐ 40 Vert, Black Bkgd, White Lettering	☐ 45 Horiz, Black Bkgd, White Lettering	☐ 50 Ascend, Black Bkgd, White Lettering
☐ 41 Vert, Red Bkgd, White Lettering	☐ 46 Horiz, Red Bkgd, White Lettering	☐ 51 Ascend, Red Bkgd, White Lettering
☐ 42 Vert, White Bkgd, Black Lettering	☐ 47 Horiz, White Bkgd, Black Lettering	☐ 52 Ascend, White Bkgd, Black Lettering
☐ 43 Vert, White Bkgd, Red Lettering	☐ 48 Horiz, White Bkgd, Red Lettering	☐ 53 Ascend, White Bkgd, Red Lettering

STEP 4: OPTIONAL FEATURES AT ADDED COST (SELECT ANY)

- ☐ Optional Tub Color: ____ Black ____ Red
- ☐ Futura "Fire" Handle ____ Mill Aluminum (**PUF**) ____ Red ____ White
- ☐ ADAC Flush Pull Handle
- ☐ Polished Chrome Lever Handle (**P6**)
- ☐ Optional Anodized Color Finish: ____ Lt Bronze ____ Med. Bronze ____ Dark Bronze
- ☐ **(CA)** Commander Alarm
- ☐ **(BA)** Brigadier Alarm

For More Information on Options See Other Submittals:
Decals/Die Cuts & Wall Signs, Handles & Levers.

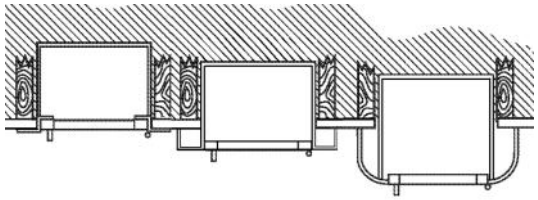

3/8" (.9cm) FLAT TRIM | **1-1/2" (3.8cm) SQUARE TRIM** | **2-1/2, 3, 4" ROLLED EDGE**

Distributor:	Quantity:
Contractor:	Approved By:
Model #:	Architect:
Project:	Date:

JL INDUSTRIES

ACTIVAR INC. www.activarcpg.com Construction Products Group

HEADQUARTERS & CUSTOMER SERVICE: 4450 WEST 78TH ST CIRCLE, BLOOMINGTON, MN 55435-5416 **PH:** 800-554-6077 **FAX:** 952-835-2218 **EMAIL:** SALES@JLINDUSTRIES.COM WWW.ACTIVARCPG.COM
ACPG SOUTHEAST (THOMAS ENTERPRISES): FT MYERS, FL **ACPG WEST COAST (SAMSON):** COMMERCE, CA **WAREHOUSES:** DALLAS TX, LANCASTER PA, ATLANTA GA, CHICAGO IL, SEATTLE WA 9-18-2012

SUBMITTAL: PANORAMA ALUMINUM FX FIRE-RATED EXTINGUISHER CABINETS

TRIM & DOOR SERIES #			Tub I.D.			Frame O.D.		Fx Wall Opening			
QTY	Model	Trim Style (in)	A	B	C	E	F	W	H	D	Extinguisher
	8125	Flat trim	9	18	5 1/2	12 3/8	21 3/8	11	20 1/8	6 3/8	Cosmic & Galaxy 2 1/2-6, Mercury 2 1/2- 5
	8126	1 1/2 Square	9	18	5 1/2	12 3/8	21 3/8	11	20 1/8	4 7/8	
	8127	2 1/2 Rolled	9	18	5 1/2	12 3/8	21 3/8	11	20 1/8	4 5/8	
	1825	Flat trim	10 1/2	24	5 1/2	13 7/8	27 3/8	12 1/2	26 1/8	6 3/8	Cosmic & Galaxy 2 1/2-10 (10 lb must be mtd on back of tub) Mercury 2 1/2-5
	1826	1 1/2 Square	10 1/2	24	5 1/2	13 7/8	27 3/8	12 1/2	26 1/8	4 7/8	
	1827	3 Rolled	10 1/2	24	5 1/2	13 7/8	27 3/8	12 1/2	26 1/8	3 1/2	
	1822	4 Rolled/ADA Pull	10 1/2	24	5 1/2	13 7/8	27 3/8	12 1/2	26 1/8	3 3/8	
	1828	4 1/2 Rolled	10 1/2	24	5 1/2	13 7/8	27 3/8	12 1/2	26 1/8	2 5/8	
	1025	Flat trim	10 1/2	24	6	13 7/8	27 3/8	12 1/2	26 1/8	6 7/8	Cosmic & Galaxy 2 1/2-10 Mercury 2 1/2-5 , Sentinel 5
	1026	1 1/2 Square	10 1/2	24	6	13 7/8	27 3/8	12 1/2	26 1/8	5 3/8	
	1027	3 Rolled	10 1/2	24	6	13 7/8	27 3/8	12 1/2	26 1/8	4	
	1022	4 Rolled/ADA Pull	10 1/2	24	6	13 7/8	27 3/8	12 1/2	26 1/8	3 5/8	
	1028	4 1/2 Rolled	10 1/2	24	6	13 7/8	27 3/8	12 1/2	26 1/8	3 3/8	
	2025	Flat trim	12	27	7 3/4	15 3/8	30 3/8	14	29 1/8	8 1/2	Any Cosmic**, Galaxy*8, Mercury, Saturn or Grenadier P, Sentinel 5 & 10
	2026	1 1/4 Square	12	27	7 3/4	15 3/8	30 3/8	14	29 1/8	7 3/8	
	2027	2 1/2 Rolled	12	27	7 3/4	15 3/8	30 3/8	14	29 1/8	7	
	2022	4 Rolled/ADA Pull	12	27	7 3/4	15 3/8	30 3/8	14	29 1/8	5 1/4	
	2028	4 1/2 Rolled	12	27	7 3/4	15 3/8	30 3/8	14	29 1/8	4 3/4	
	3025	Flat trim	16	32	7 3/4	19 3/8	35 3/8	18	34 1/8	8 1/2	Any Cosmic**, Galaxy**, Mercury, Saturn or Grenadier P, Sentinel 5-15, 272
	3026	1 1/4 Square	16	32	7 3/4	19 3/8	35 3/8	18	34 1/8	7 3/8	
	3027	2 1/2 Rolled	17	34	9	20 3/8	38 3/8	18	34 1/8	7	
	3022	4 Rolled/ADA Pull	16	32	7 3/4	19 3/8	35 3/8	18	34 1/8	5-1/4	
	3028	4 1/2 Rolled	16	32	7 3/4	19 3/8	35 3/8	18	34 1/8	4 3/4	
	4025	Flat trim	20	27	7 3/4	23 3/8	30 3/8	22	29 1/8	8 1/2	Two each of: any Cosmic**, Galaxy**, Mercury, Saturn or Grenadier P, Sentinel 5
	4026	1 1/4 Square	20	27	7 3/4	23 3/8	30 3/8	22	29 1/8	7 3/8	
	4027	2 1/2 Rolled	20	27	7 3/4	23 3/8	30 3/8	22	29 1/8	7	
	4022	4 Rolled/ADA Pull	20	27	7 3/4	23 3/8	30 3/8	22	29 1/8	5 1/4	
	4028	4 1/2 Rolled	20	27	7 3/4	23 3/8	30 3/8	22	29 1/8	4 3/4	

Models shown in **Large Bold** above are available in several door styles for Quick Shipment. See current Stock List.

** Cosmic 20 & Galaxy 20 Extinguisher must be mounted on the back of the cabinet tub

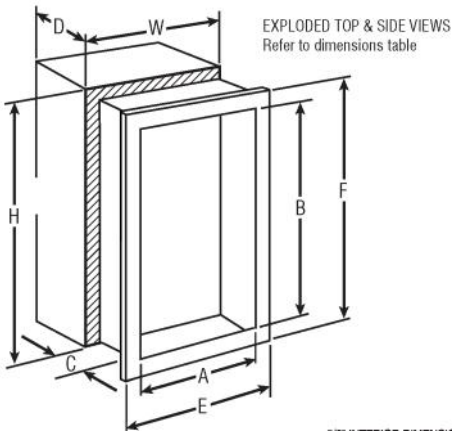

PANORAMA "P" & "Q" DOOR GLAZING STYLES