SUBMITTAL: PANORAMA FX FIRE-RATED STEEL FIRE EXTINGUISHER CABINETS

The Panorama Cabinet Features a Frameless Acrylic Door of Clear or Opaque Textured Acrylic with Many Lettering Options.

Door & Trim Construction: Flush acrylic cabinet doors are attached by a continuous hinge and equipped with zinc-plated handle and roller catch. 1-3/4" trim on cabinet has white powder coat finish.

Trim Style & Depth: *Recessed* 3/8" flat trim, *Semi Recessed* - 1-1/4", 1-1/2" Square Edge or 2-1/2", 3", 4", 4-1/2" Rolled Edge (4" has recessed ADAC pull).

Tub: The double tub is constructed of cold rolled steel with white powder-coat finish standard. Tub forms a flange to cover cut edges of wallboard material. Fire-resistant material is sandwiched between the layers of steel.

Fire-Rating: The recessed and semi-recessed Fire-FX™ cabinets are fabricated in accordance with the Warnock Hersey label for one and two hour combustible and non-combustible wall system building codes. The fire testing has met the requirement of the UBC standard 43-6 and ASTM-E814-83 for membrane and penetration firestops. Installation instructions must be strictly adhered to in order to obtain the fire rating. The installation of any fire-rated cabinet which lacks a cabinet door or a condition in which the door is left ajar, will void the fire rating.

1012P48FX
4" Rolled Trim
Semi-Recessed
With ADAC Handle

1817Q51FX
3" Rolled Trim

STEP 1: SELECT MODEL NUMBER , MATERIAL AND QUANTITY ON CHART (refer to chart on pg 2)

A. Determine Trim Style according to wall depth. **B.** Determine Tub I.D. according to size most suited for extinguisher and wall opening.

STEP 2: SELECT DOOR ACRYLIC WITH HANDLE (Check one box below)

	C70 Clear 3/16" Unlettered Smooth Acrylic		**P** Identity: 3/16" Textured Obscure Acrylic with Lettering
	C71 Clear 3/16" Unlettered Smooth Acrylic & Saf-T-Lok™		**Q** Identity: 3/16" Textured Obscure Acrylic with Lettering & Saf-T-Lok™

STEP 3 - P&Q DOORS SELECT LETTERING STYLE View lettering styles on page 2 or: VIEW LETTERING STYLES

	40 Vert, Black Bkgd, White Lettering		**45 Horiz, Black Bkgd, White Lettering**		**50 Ascend, Black Bkgd, White Lettering**
	41 Vert, Red Bkgd, White Lettering		**46 Horiz, Red Bkgd, White Lettering**		**51 Ascend, Red Bkgd, White Lettering**
	42 Vert, White Bkgd, Black Lettering		**47 Horiz, White Bkgd, Black Lettering**		**52 Ascend, White Bkgd, Black Lettering**
	43 Vert, White Bkgd, Red Lettering		**48 Horiz, White Bkgd, Red Lettering**		**53 Ascend, White Bkgd, Red Lettering**

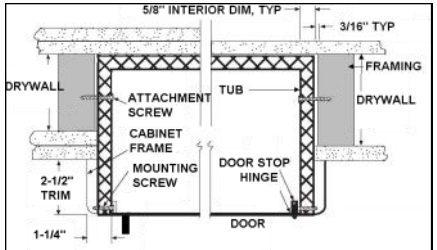

TYPICAL FIRE-RATED INSTALLATION

STEP 4: OPTIONAL FEATURES AT ADDED COST (SELECT ANY)

	Optional Tub Color: ____ Black ____ Red		**(CA)** Commander Alarm
	Futura "Fire" Handle ____ Mill Aluminum (**PUF**) ____ Red ____ White		**(BA)** Brigadier Alarm
	Optional Color: ____ Red ____ Black ____ Flat Black		ADAC Flush Pull Handle
	____ Sand ____ AMS Beige ____ SC Flat Beige		Polished Chrome Lever Handle (**P6**)
	____ Gray Primer ____ Bronze ____ Satin Aluminum		

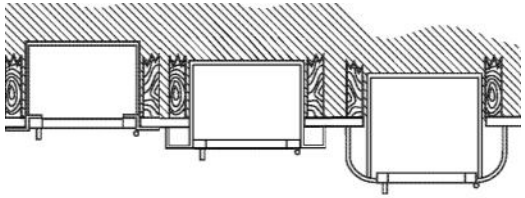

3/8" (.9cm) FLAT TRIM **1-1/2" (3.8cm) SQUARE TRIM** **2-1/2, 3, 4" ROLLED EDGE**

For More Information on Options See Other Submittals: Lettering, Wall Signs, Handles & Levers, Custom Colors

JL INDUSTRIES / ACTIVAR INC. www.activarcpg.com Construction Products Group	Distributor:	Quantity:
	Contractor:	Approved By:
	Model #:	Architect:
	Project:	Date:

HEADQUARTERS & CUSTOMER SERVICE: 4450 WEST 78TH ST CIRCLE, BLOOMINGTON, MN 55435-5416 **PH:** 800-554-6077 **FAX:** 952-835-2218 **EMAIL:** SALES@JLINDUSTRIES.COM WWW.ACTIVARCPG.COM
ACPG SOUTHEAST (THOMAS ENTERPRISES): FT MYERS, FL **ACPG WEST COAST (SAMSON):** COMMERCE, CA **WAREHOUSES:** DALLAS TX, LANCASTER PA, ATLANTA GA, CHICAGO, IL, SEATTLE WA 4-30-2012

SUBMITTAL: PANORAMA FX FIRE-RATED STEEL FIRE EXTINGUISHER CABINETS

TRIM & DOOR SERIES #			Tub I.D.			Frame O.D.		Fx Wall Opening			
QTY	Model	Trim Style	A	B	C	E	F	W	H	D	Extinguisher
	8115	Flat trim	9	18	5 1/2	12 3/8	21 3/8	11	20 1/8	6 3/8	Cosmic & Galaxy 2 1/2-6, Mercury 2 1/2- 5
	8116	1 1/2 Square	9	18	5 1/2	12 3/8	21 3/8	11	20 1/8	4 7/8	
	8117	2 1/2 Rolled	9	18	5 1/2	12 3/8	21 3/8	11	20 1/8	4	
	1815	Flat trim	10 1/2	24	5 1/2	13 7/8	27 3/8	12 1/2	26 1/8	6 3/8	Cosmic & Galaxy 2 1/2-10* Mercury 2 1/2-5
	1816	1 1/2 Square	10 1/2	24	5 1/2	13 7/8	27 3/8	12 1/2	26 1/8	4 7/8	
	1817	3 Rolled	10 1/2	24	5 1/2	13 7/8	27 3/8	12 1/2	26 1/8	3 1/2	
	1812	4 Rolled/ADA Pull	10 1/2	24	5 1/2	13 7/8	27 3/8	12 1/2	26 1/8	2 1/2	
	1818	4 1/2 Rolled	10 1/2	24	5 1/2	13 7/8	27 3/8	12 1/2	26 1/8	2	
	1015	Flat trim	10 1/2	24	6	13 7/8	27 3/8	12 1/2	26 1/8	6 7/8	Cosmic & Galaxy 2 1/2-10 Mercury 2 1/2-5 , Sentinel 5
	1016	1 1/2 Square	10 1/2	24	6	13 7/8	27 3/8	12 1/2	26 1/8	5 3/8	
	1017	3 Rolled	10 1/2	24	6	13 7/8	27 3/8	12 1/2	26 1/8	4	
	1012	4 Rolled/ADA Pull	10 1/2	24	6	13 7/8	27 3/8	12 1/2	26 1/8	3	
	1018	4 1/2 Rolled	10 1/2	24	6	13 7/8	27 3/8	12 1/2	26 1/8	2 1/2	
	2015	Flat trim	12	27	7 3/4	15 3/8	30 3/8	14	29 1/8	8 1/2	Any Cosmic. Galaxy, Mercury, Saturn or Grenadier P, Sentinel 5 & 10
	2016	1 1/4 Square	12	27	7 3/4	15 3/8	30 3/8	14	29 1/8	7 3/8	
	2017	2 1/2 Rolled	12	27	7 3/4	15 3/8	30 3/8	14	29 1/8	6 3/8	
	2012	4 Rolled/ADA Pull	12	27	7 3/4	15 3/8	30 3/8	14	29 1/8	4 5/8	
	2018	4 1/2 Rolled	12	27	7 3/4	15 3/8	30 3/8	14	29 1/8	4 1/8	
	3015	Flat trim	16	32	7 3/4	19 3/8	35 3/8	18	34 1/8	8 1/2	Any Cosmic. Galaxy, Mercury, Saturn or Grenadier P, Sentinel 5-15, 272
	3016	1 1/4 Square	16	32	7 3/4	19 3/8	35 3/8	18	34 1/8	7 3/8	
	3017	2 1/2 Rolled	17	34	9	20 3/8	38 3/8	18	34 1/8	6 3/8	
	3012	4 Rolled/ADA Pull	16	32	7 3/4	19 3/8	35 3/8	18	34 1/8	4 5/8	
	3018	4 1/2 Rolled	16	32	7 3/4	19 3/8	35 3/8	18	34 1/8	4 1/8	
	4015	Flat trim	20	27	7 3/4	23 3/8	30 3/8	22	29 1/8	8 1/2	Two each of: any Cosmic, Galaxy, Mercury, Saturn or Grenadier P, Sentinel 5
	4016	1 1/4 Square	20	27	7 3/4	23 3/8	30 3/8	22	29 1/8	7 3/8	
	4017	2 1/2 Rolled	20	27	7 3/4	23 3/8	30 3/8	22	29 1/8	6 3/8	
	4012	4 Rolled/ADA Pull	20	27	7 3/4	23 3/8	30 3/8	22	29 1/8	4 5/8	
	4018	4 1/2 Rolled	20	27	7 3/4	23 3/8	30 3/8	22	29 1/8	4 1/8	

* 10 lb extinguishers must be mounted to the back of the tub.

** When using Grenadier P with FIRE-FX® Option, The extinguisher must be mounted on the back of the tub.

Models shown in **Large Bold** above are available in several door styles for Quick Shipment. See current Stock List.

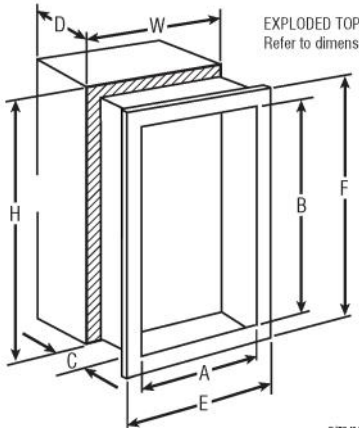

PANORAMA "P" & "Q" DOOR GLAZING STYLES