SUBMITTAL: RBC ALUMINUM CABINET

The RC Series is an all-aluminum cabinet with an anodized finish that is corrosion-resistant and ideal for exterior or coastal installations. Choose from a wide range of door styles, glazing and sizes.

Door & Trim: Satin aluminum with clear anodized finish. Flush cabinet doors are mounted in a 5/8" door stop, are attached by an aluminum continuous hinge and are equipped with aluminum handle and roller catch.

Trim Style and Depth: Semi-recessed: 1", 1-3/8" or 3" Rolled Edge. Surface mounted models have a rolled edge. 1-5/8" face trim on frame and door.

Tub: Aluminum with white powder coat finish. Surface mounted models have clear anodized aluminum tub.

Fire-Rated Option Available: Yes - See separate submittal.

RBC5525F25

STEP 1: SELECT MODEL NUMBER, DOOR STYLE & QUANTITY (Refer to Chart on Page 2)

STEP 2: SELECT DOOR STYLE (See Page 2)

- ☐ **F** Full Glazing with Pull Handle
- ☐ **G** Full Glazing with SAF-T-LOK™ & Pull

STEP 3: SELECT BUBBLE

- ☐ 25 Acrylic Bubble
- ☐ 26 Red Acrylic Bubble
- ☐ 27 Bronze Acrylic Bubble

STEP 4: OPTIONAL FEATURES AT ADDED COST (SELECT ANY)

- ☐ Optional Tub Color: ____ Black _____Red
- ☐ Futura "Fire" Handle, Red, Mill or White (**PUF**)
- ☐ Painted Door: ____ White ____ Bronze ____ Red
- ☐ Optional Paint Color - contact Cust Service

- ☐ Black Vertical FE Letters **LDCVBFE**
- ☐ Red Vertical FE Letters **LDCVRFE**
- ☐ White Vertical FE Letters **LDCVWFE**
- ☐ Black Horizontal FE Letters **LDCHBFE**
- ☐ Red Horizontal FE Letters **LDCHRFE**
- ☐ White Horizontal FE Letters **LDCHWFE**

- ☐ Black Vertical Decal **LDVBFE**
- ☐ Red Vertical Decal **LDVRFE**
- ☐ White Vertical Decal **LDVWFE**
- ☐ Black Horizontal Decal **LDHBFE**
- ☐ Red Horizontal Decal **LDHRFE**
- ☐ White Horizontal Decal **LDHWFE**

- ☐ **(CA)** Commander Alarm
- ☐ **(BA)** Brigadier Alarm
- ☐ **(SA)** Strobe Alarm

For More Information on Options See Other Submittals: Decals & Die Cuts & Wall Signs, Handles & Levers, Custom Colors

JL INDUSTRIES

THOMAS ENTERPRISES

ACTIVAR INC. www.activarcpg.com Construction Products Group

Distributor:	Quantity:
Contractor:	Approved By:
Model #:	Architect::
Project:	Date:

HEADQUARTERS & CUSTOMER SERVICE:4450 WEST 78TH ST CIRCLE, BLOOMINGTON, MN 55435-5416 **PH**: 800-554-6077 **FAX:** 952-835-2218
EMAIL: SALES@JLINDUSTRIES.COM WWW.ACTIVARCPG.COM
ACPG SOUTHEAST (THOMAS ENTERPRISES): FT MYERS, FL **ACPG WEST COAST (SAMSON PRODUCTS):** COMMERCE, CA **ACPG WAREHOUSES:** DALLAS TX, LANCASTER PA, ATLANTA GA , CHICAGO IL, SEATTLE WA 2/1/2011

SUBMITTAL: RBC ALUMINUM CABINET

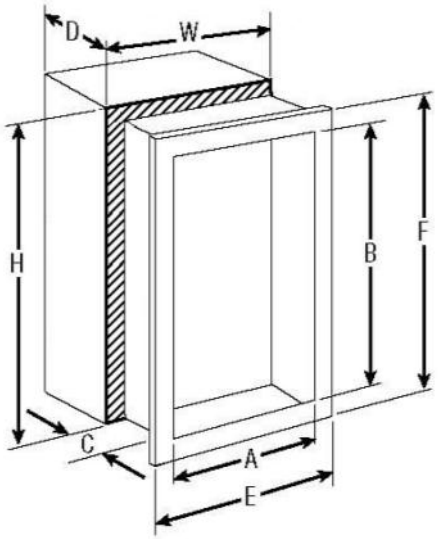

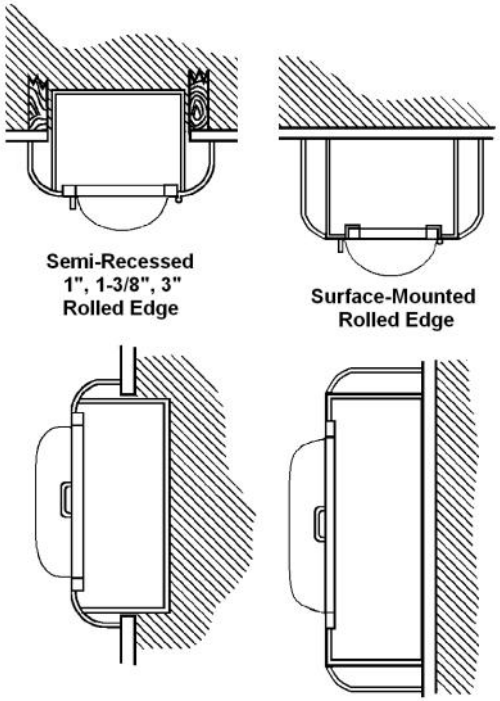

TRIM & DOOR MATERIAL & SERIES				TUB I.D. W x H x D in Inches			FRAME O.D. in Inches		RECESSED WALL OPENING in Inches			ACCOMODATES FOLLOWING EXTINGUISHERS
QTY	Model	Prev Model #	TRIM STYLE	A	B	C	E	F	W	H	D	
	5525	RBC-10	**1" Rolled Edge**	10	24	3 1/2	13 1/4	27 1/4	11	25	2 1/2	**Cosmic 2-1/2, Galaxy 2-1/2 or Mercury 2-1/2**
	5526	RBC-10SR1	**1-3/8" Rolled Edge**	10	24	3 1/2	13 1/4	27 1/4	11	25	2 1/8	
	5527	RBC-10SR3	**3" Rolled Edge**	10	24	3 1/2	13 1/4	27 1/4	11	25	2	
	5529	RBC-10SM	**Surface Mounted**	13 1/8	27 1/8	4 11/16	13 1/4	27 1/4	--	--	--	**Cosmic 2-1/2-10, Galaxy 2-1/2, Mercury 2-1/2, Sentinel 5**
	9525	RBC-20	**1" Rolled Edge**	13 1/2	29 3/8	4	16 3/4	32 5/8	14 1/2	30 3/8	3	
	9526	RBC-20SR1	**1-3/8" Rolled Edge**	13 1/2	29 3/8	4	16 3/4	32 5/8	14 1/2	30 3/8	2 5/8	
	9527	RBC-20SR3	**3" Rolled Edge**	13 1/2	29 3/8	4	16 3/4	32 5/8	14 1/4	30 3/8	2 1/2	
	9529	RBC-20SM	**Surface-Mounted**	16 5/8	32 1/2	4 11/16	16 3/4	32 5/8	--	--	--	
Dimensions in Inches												