SUBMITTAL: 1900 FX SERIES OLYMPUS AED & OXYGEN CABINET

Description: 1900 Series is designed to accommodate most AED's on the market today with room for an oxygen tank. Recessed models are ADAC-Compliant . Select from steel, stainless steel or aluminum construction.

Trim Construction: CRS with white powder-coat finish, #4 brushed stainless steel or clear anodized aluminum. 1-3/4" trim on face.

Door: Formed door with 1-3/4" trim, mounted in a 5/8" door stop with zinc-plated handle and roller catch and continuous hinge. All models feature a clear acrylic window with graphics enclosed, zinc-plated handle and roller catch.

Trim Style & Depth: *Recessed* – 3/8" flat trim, *Semi*-Recessed – 1-1/2" square edge or 3" rolled edge.

Alarm: 85 db Commander (audible) alarm standard.

Tub: The double tub is constructed of cold rolled steel with white powder-coat finish standard. Fire-resistant material is sandwiched between the layers of steel.

Oxygen: Accommodates up to "D" size cylinder. See options below.

1915F12FX Cabinet with 3/8"Flat Trim

Fire-Rating: The recessed and semi-recessed Fire-FX™ cabinets are fabricated in accordance with the Warnock Hersey label for one and two hour combustible and non-combustible wall system building codes. The fire testing has met the requirement of the UBC standard 43-6 and ASTM-E814-83 for membrane and penetration firestops. Installation instructions must be strictly adhered to in order to obtain the fire rating. The installation of any fire-rated cabinet which lacks a cabinet door or a condition in which the door is left ajar, will void the fire rating.

TRIM & DOOR MATERIAL & SERIES #							TUB I.D.			FRAME O.D.		WALL OPENING FIRE RATED		
QTY	STEEL	QTY	ALUMINUM	QTY	STAINLESS STEEL	TRIM STYLE	A	B	C	E	F	W	H	D
	1915F12FX		**1925F12FX**		**1935F12FX**	3/8" Flat Trim	18"	18"	8"	21-3/8"	21-3/8"	20"	20-1/8"	8-5/8"
	1916F12FX		**1926F12FX**		**1936F12FX**	1-1/2" Square	18"	18"	8"	21-3/8"	21-3/8"	20"	20-1/8"	7-3/4"
	1917F12FX		**1927F12FX**		**1937F12FX**	3" Rolled	18"	18"	8"	21-3/8"	21-3/8"	20"	20-1/8"	6-1/2"

Optional Features at Additional Cost:

- ☐ (SA) Siren Strobe Alarm and 85 db Alarm for 3" Rolled Model Only.
- ☐ (14STC) Saf-T-Clasp for Visual Notification When Door has been opened
- ☐ Custom Door Graphics - Contact Customer Service
- ☐ AED Wall Signs - See Separate Submittal
- ☐ T^xO^2 Oxygen System that features easy-to-use automatic flow system.
- ☐ Bronze or Brass Finish
- ☐ (14MAG) Magnetic Door Contact for Existing Alarm Systems
- ☐ (14RR) Roller Reed Ball Contact for Existing Alarm Systems
- ☐ Custom Colors or Sizes (Provide Paint Chip)

JL INDUSTRIES

ACTIVAR INC. Construction Products Group www.activarcpg.com

Distributor:	Quantity:
Contractor:	Approved By:
Model #:	Architect:
Project:	Date:

HEADQUARTERS & JL INDUSTRIES:4450 WEST 78TH ST CIRCLE, BLOOMINGTON, MN 55435-5416 **PH**: 800-554-6077 **FAX:** 952-835-2218 **EMAIL:** SALES@JLINDUSTRIES.COM WWW.ACTIVARCPG.COM
ACPG SOUTHEAST (THOMAS ENTERPRISES): FT MYERS, FL **FAX:** 239-693-7501 **ACPG WAREHOUSES:** COMMERCE CA **(SAMSON MFG),** DALLAS TX, LANCASTER PA, ATLANTA GA, SEATTLE WA 10-22-12

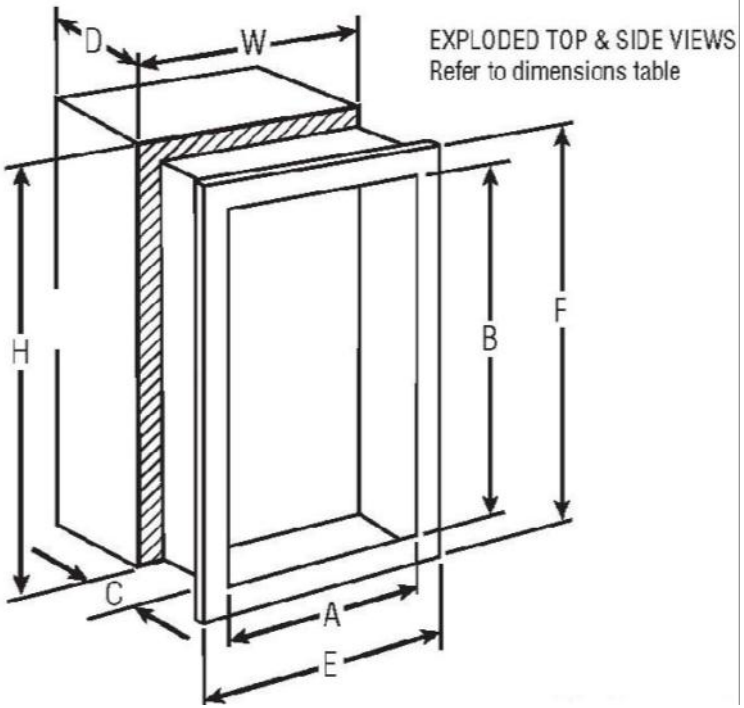
D
W
EXPLODED TOP & SIDE VIEWS
Refer to dimensions table
H
B
F
C
A
E

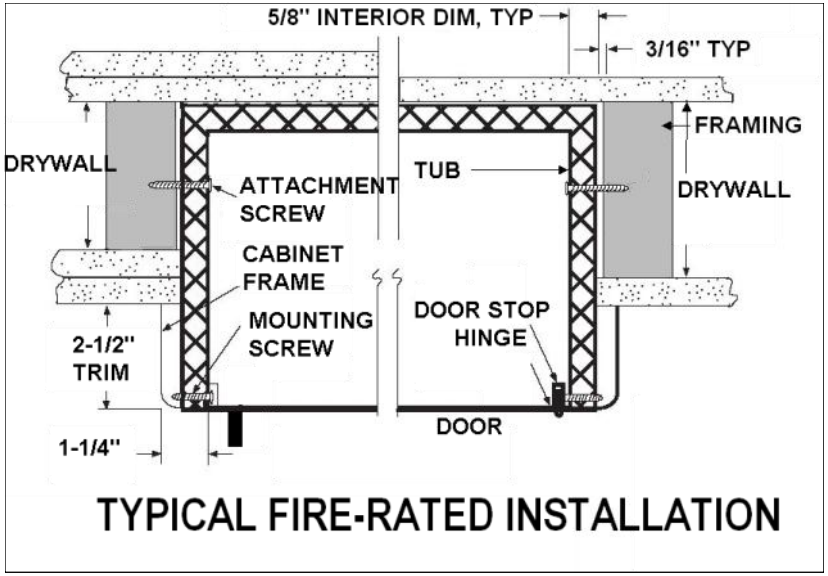
5/8" INTERIOR DIM, TYP
3/16" TYP
FRAMING
DRYWALL
ATTACHMENT SCREW
TUB
DRYWALL
CABINET FRAME
MOUNTING SCREW
DOOR STOP HINGE
2-1/2" TRIM
1-1/4"
DOOR
TYPICAL FIRE-RATED INSTALLATION

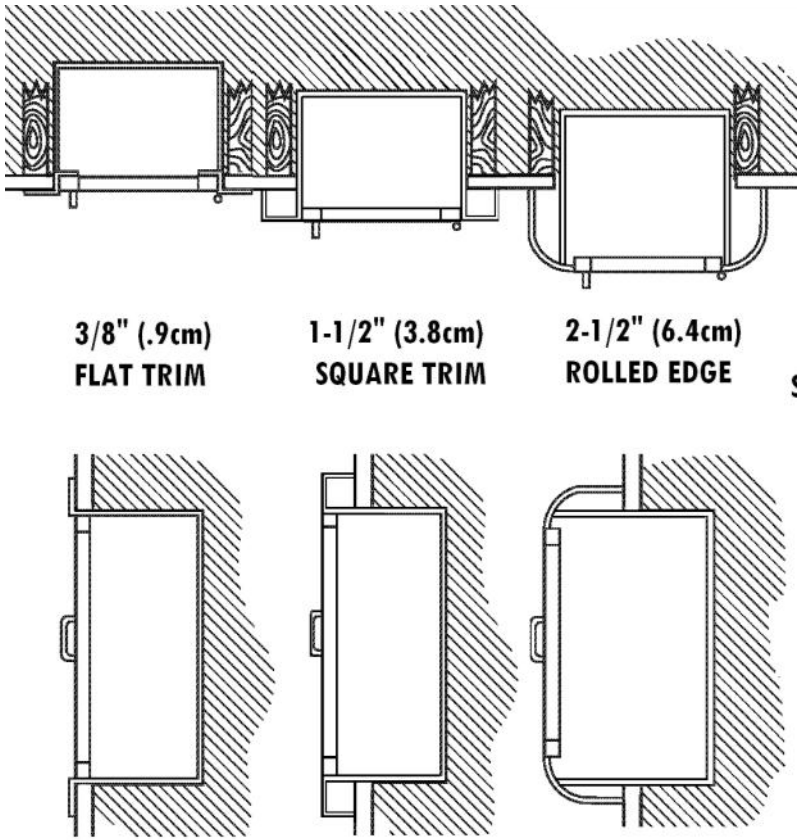
3/8" (.9cm)
FLAT TRIM
1-1/2" (3.8cm)
SQUARE TRIM
2-1/2" (6.4cm)
ROLLED EDGE