Submit by Email | Print Form

# SUBMITTAL: RC ALUMINUM CABINET



**The RC Series is an all-aluminum cabinet with an anodized finish that is corrosion-resistant and ideal for exterior or coastal installations. Choose from a wide range of door styles, glazing and sizes.**

**Door & Trim:** Aluminum with clear anodized finish. Flush cabinet doors are mounted in a 5/8" door stop, are attached by an aluminum continuous hinge and equipped with aluminum handle and roller catch.

**Trim Style and Depth**: Semi-recessed: 1-3/8, 3 or 5-7/16" Rolled Edge. Surface mounted models have a rolled edge. 1-5/8" face trim on frame and door.

**Tub:** White powder coated aluminum..

**Fire-Rated Option Available:** Yes - See separate submittal.

**STEP 1: SELECT MODEL NUMBER, DOOR STYLE & QUANTITY (Refer to Chart on Page 2)**

**STEP 2: SELECT DOOR STYLE (See Page 2)** (Check one box below)

- ☐ **F** Full Glazing with Pull Handle
- ☐ **G** Full Glazing with SAF-T-LOK™
- ☐ **D** Horizontal Duo Panel with Pull Handle
- ☐ **E** Horizontal Dual Panel with SAF-T-LOK™
- ☐ **S21** Solid Door with Pull Handle
- ☐ **L22** Solid with SAF-T-LOK™
- ☐ **V** Vertical Duo & Lettering
- ☐ **W** Vertical Duo with SAF-T-LOK™

**STEP 3: SELECT DOOR GLAZING** (Check one box below)

- ☐ **10** Clear Acrylic
- ☐ **13** Clear Wire Glass
- ☐ **15** Bronze Acrylic
- ☐ **16** Gray Acrylic
- ☐ **17** Clear Tempered Glass

**STEP 4: Optional Features at Additional Cost:**

- ☐ Chrome Ring Pull
- ☐ Optional Tub Color: Red _____ Black _____
- ☐ Corner-Mounted Cabinet
- ☐ Painted Door: _____ White _____ Bronze
- ☐ Clear satin anodized aluminum Tub
- ☐ ADA Flush Pull Handle
- ☐ Polished Chrome Lever Handle
- ☐ Wall Signs
- ☐ **PUF** Futura "Fire" Handle
- ☐ FE Diecut Letters - Black Vertical
- ☐ FE Diecut Letters - Red Vertical
- ☐ FE Diecut Letters - White Vertical
- ☐ FE Diecut Letters - Black Horizontal
- ☐ FE Diecut Letters - Red Horizontal
- FE Diecut Letters - White Horizontal

**RC Model 1327**

JL INDUSTRIES | THOMAS ENTERPRISES | ACTIVAR INC. www.activarcpg.com Construction Products Group

| | |
|---|---|
| Distributor: | Quantity: |
| Contractor: | Approved By: |
| Model #: | Architect: |
| Project: | Date: |

**HEADQUARTERS & CUSTOMER SERVICE**:4450 WEST 78TH ST CIRCLE, BLOOMINGTON, MN 55435-5416 **PH**: 800-554-6077 **FAX:** 952-835-2218
**EMAIL:** SALES@JLINDUSTRIES.COM WWW.ACTIVARCPG.COM
**ACPG SOUTHEAST (THOMAS ENTERPRISES):** FT MYERS, FL **ACPG WEST COAST (SAMSON PRODUCTS):** COMMERCE, CA **ACPG WAREHOUSES:** DALLAS TX, LANCASTER PA, ATLANTA GA , CHICAGO IL, SEATTLE WA 3/21/2011

# SUBMITTAL: RC ALUMINUM CABINET



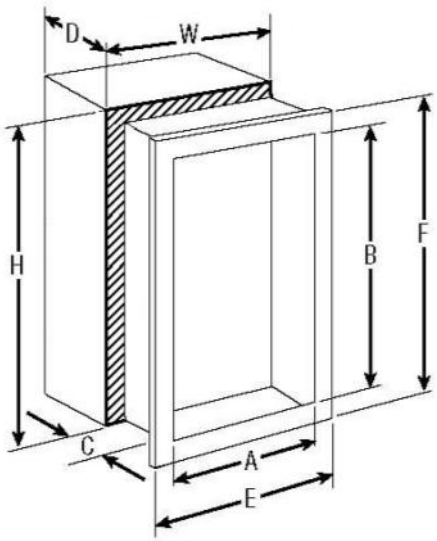


**Door Styles**

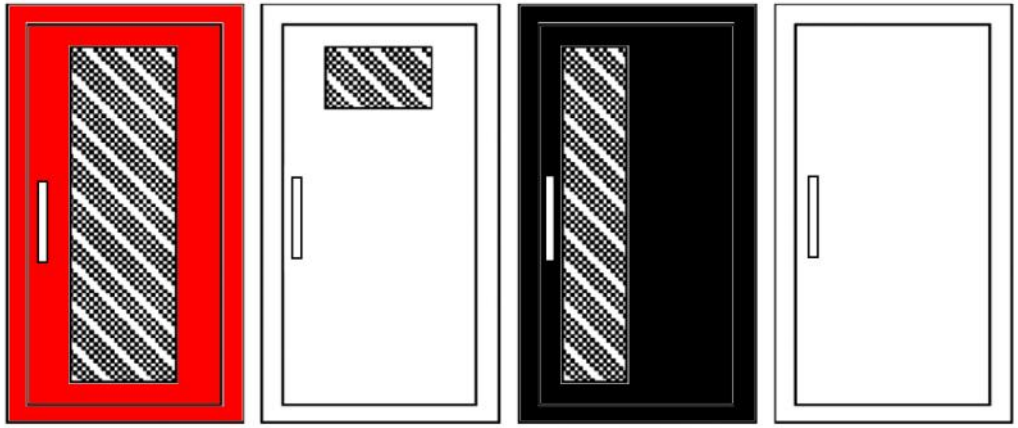

F - Full glass with pull handle
G - Full glass with pull handle and Saf-T-Lok

D - Horizontal duo panel with pull handle
E - Horizontal duo panel with pull handle and Saf-T-Lok

V - Vertical duo panel with pull handle
W - Vertical duo panel with pull handle and Saf-T-Lok

S21 - Solid with pull handle
L22 - Solid with pull handle and Saf-T-Lok

| TRIM & DOOR MATERIAL & SERIES | | | TUB I.D. W x H x D in Inches | | | FRAME O.D. in Inches | | RECESSED WALL OPENING in Inches | | | ACCOMODATES FOLLOWING EXTINGUISHERS |
|---|---|---|---|---|---|---|---|---|---|---|---|
| QTY | # | TRIM STYLE | A | B | C | E | F | W | H | D | |
| | 1126 | 1-3/8" Rolled Edge | 9 | 18 | 4-11/16 | 12-1/4 | 21-1/4 | 10 | 19 | 4 | Cosmic 2-1/2, Galaxy 2-1/2 or Mercury 2-1/2 |
| | 1127 | 3" Rolled Edge | 9 | 18 | 4-11/16 | 12-1/4 | 21-1/4 | 10 | 19 | 2-3/8 | |
| | 1129 | Surface Mounted | 12-1/8 | 24-1/8 | 4-11/16 | 12-1/4 | 21-1/4 | -- | -- | -- | |
| | 1225 | 1" Rolled Edge | 10-1/2 | 24 | 6 | 13-3/4 | 27-1/4 | 11-1/2 | 25 | 5-11/16 | Cosmic 2-1/2-10, Galaxy 2-1/2, Mercury 2-1/2, Sentinel 5 |
| | 1226 | 1-3/8" Rolled Edge | 10-1/2 | 24 | 6 | 13-3/4 | 27-1/4 | 11-1/2 | 25 | 5-1/2 | |
| | 1227 | 3" Rolled Edge | 10-1/2 | 24 | 6 | 13-3/4 | 27-1/4 | 11-1/2 | 25 | 3-3/4 | |
| | 1228 | 5-7/16" Rolled Edge | 10-1/2 | 24 | 6 | 13-3/4 | 27-1/4 | 11-1/2 | 25 | 1-1/4 | |
| | 1229 | Surface-Mounted | 13-5/8 | 27-1/8 | 6-1/4 | 13-3/4 | 27-1/4 | -- | -- | -- | |
| | 1325 | 1" Rolled Edge | 12 | 27 | 8 | 15-5/16 | 30-1/4 | 13 | 28 | 7-11/16 | Any Cosmic, Galaxy or Mercury, Sentinel 5 |
| | 1326 | 1-3/8" Rolled Edge | 12 | 27 | 8 | 15-5/16 | 30-1/4 | 13 | 28 | 7-5/16 | |
| | 1327 | 3" Rolled Edge | 12 | 27 | 8 | 15-5/16 | 30-1/4 | 13 | 28 | 5-11/16 | |
| | 1328 | 5-7/16" Rolled Edge | 12 | 27 | 8 | 15-5/16 | 30-1/4 | 13 | 28 | 3-1/4 | |
| | 1329 | Surface Mounted | 15-1/8 | 30-1/8 | 8 | 15-5/16 | 30-1/4 | -- | -- | -- | |