SUBMITTAL: EMBASSY FIRE EXTINGUISHER, VALVE & HOSE RACK CABINETS

The Embassy Series is a Decorative, Trimless, Recessed Cabinet Suitable for the Most Upscale Application in our Finest Finishes of Brass, Bronze, Stainless Steel, Aluminum or Painted Steel.

Door & Trim Construction: The 7/8" thick formed cabinet doors are available in #4 satin stainless steel, US10 satin bronze, US3 polished brass, #180 clear anodized aluminum or powder-coated white steel. Doors feature two concealed hinges at top & bottom of door, concealed handle and roller catch. "W" and "L22" Models have a SAF-T-LOK® and pull on the outside of the door.

Tub: The tub is constructed of cold rolled steel with white powder-coat finish standard. Tub forms a 1" flange to cover cut edges of wallboard material. 5900 has shelf 12" from bottom.

Knockouts: Models designed for use with Fire Department Valves & Hose Racks - 5500: 2 KO's centered on tub, one on each side, or 9" from top, 4" from back. 5800: 2 KO's on left side only, 4" from top and 4" from bottom, 4" from back. 5900: 2 KO's, on each side, 6" from bottom, 4-1/4" from back.

5644V10 Bronze

5634L22 Stainless Steel

STEP 1: SELECT MODEL NUMBER , MATERIAL AND QUANTITY ON CHART (refer to chart on pg 2)

A. Determine Trim Style according to wall depth.
B. Determine Tub I.D. according to size most suited for extinguisher and wall opening.

STEP 2: SELECT DOOR STYLE Check one box below)

- ☐ **V** Vertical Duo (No Pull)
- ☐ **W** Vertical Duo with **SAF-T-LOK**™ & Pull
- ☐ **S21** Solid (No Pull)
- ☐ **L22** Solid with **SAF-T-LOK**™ & Pull

STEP 3: SELECT DOOR GLAZING (Check one box below)

- ☐ **10** Clear Acrylic
- ☐ **13** Clear Wire Glass
- ☐ **15** Bronze Acrylic
- ☐ **16** Gray Acrylic
- ☐ **17** Clear Tempered Glass
- ☐ **18** Laminated Safety Glass

STEP 4: OPTIONAL FEATURES AT ADDED COST (SELECT ANY)

- ☐ Optional Color Tub ___ Red ___ Black
- ☐ Bronze Anodized Aluminum: ___ Lt Bronze
- ___ Medium Bronze ___ Dark Bronze
- ☐ Optional Color Painted Steel Door
- ☐ ___ #6 ___ #7 ___ #8 Stainless Steel
- ☐ US9 Polished Bronze Door - Clear-coated
- ☐ US10B Oil-Rubbed Bronze
- ☐ US4 Satin Brass Door - Clear-coated
- ☐ FE Letters - Black Vertical
- ☐ FE Letters– Red Vertical
- ☐ FE Letters - White Vertical
- ☐ FE Letters - Black Horizontal
- ☐ FE Letters - Red Horizontal
- ☐ FE Letters - White Horizontal
- ☐ Decals - Black Vertical
- ☐ Decals - Red Vertical
- ☐ Decals - White Vertical
- ☐ Decals - Black Horizontal
- ☐ Decals - Red Horizontal
- ☐ Decals - White Horizontal
- ☐ Pull ___ Zinc ___ Brass ___ Bronze ___ Chrome ___ Other
- ☐ Etched or Engraved Lettering in Glass or Metal
- ☐ **(BA)** Brigadier Alarm
- ☐ **(PUF)** Futura "Fire" Handle, Red Mill or White
- ☐ **(CA)** Commander Alarm

JL INDUSTRIES / ACTIVAR INC. www.activarcpg.com Construction Products Group	Distributor:	Quantity:
	Contractor:	Approved By:
	Model #:	Architect:
	Project:	Date:

HEADQUARTERS & CUSTOMER SERVICE:4450 WEST 78TH ST CIRCLE, BLOOMINGTON, MN 55435-5416 **PH**: 800-554-6077 **FAX:** 952-835-2218 **EMAIL:** SALES@JLINDUSTRIES.COM WWW.ACTIVARCPG.COM
ACPG SOUTHEAST (THOMAS ENTERPRISES):FT MYERS, FL **ACPG WEST COAST (SAMSON):** COMMERCE, CA **WAREHOUSES:** DALLAS TX, LANCASTER PA, ATLANTA GA, CHICAGO, IL, SEATTLE WA 6-9-2011

SUBMITTAL: EMBASSY FIRE EXTINGUISHER CABINETS

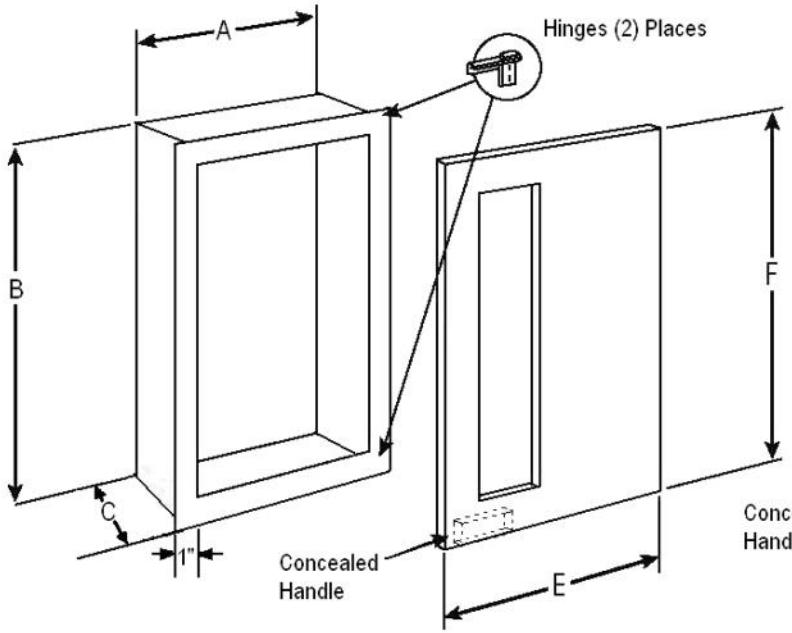

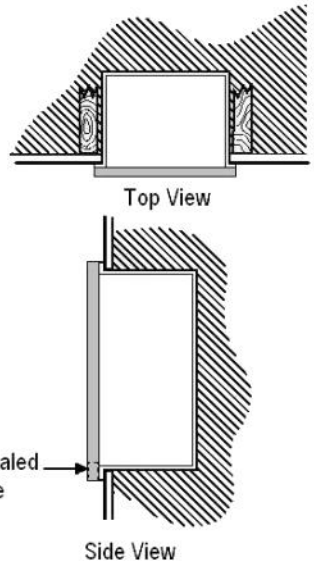

5634S21 Stainless Steel

5714W10

TRIM & DOOR MATERIAL & SERIES											TUB I.D. in Inches			DOOR O.D.		WALL OPENING			RECOMMENDED HOSE, RACK & EXTIN GUISHER
QTY	STEEL	QTY	ALUMI-NUM	QTY	STAIN LESS	QTY	BRONZE	QTY	BRASS	STYLE	A	B	C	E	F	W	H	D	
FIRE EXTINGUISHER CABINETS																			
	5614		**5624**		**5634**		**5644**		**5654**	Trimless	10-1/2"	24"	6"	12-3/4"	26-1/4"	11-1/2"	25"	6"	Cosmic 2-1/2E, 5E, 5X, 6E, 10E Galaxy 2-1/2, 5, 5-1/2,6,10, Sentinel 5, Mercury 2-1/2, 5
	5714		**5724**		**5734**		**5744**		**5754**	Trimless	16"	32"	7-3/4"	18-1/4"	34-1/4"	17"	33"	8"	Any Cosmic, any Galaxy, Grenadier P, Sentinel 5, 10, 15, Mercury 2-1/2, 5, any Saturn
VALVE CABINETS																			
	5514		**5524**		**5534**		**5544**		**5554**	Trimless	18"	18"	7-3/4"	20-1/4"	20-1/4"	19"	19"	8"	1-1/2" or 2-1/2" Fire Department Valve
	5814		**5824**		**5834**	--	--	--	--	Trimless	32"	32"	7-3/4"	34-1/4"	34-1/4"	33"	33"	8"	1-1/2" or 2-1/2"x1-1/2" rack unit & a 2-1/2" Fire Department Valve or Fire Extinguisher
FIRE DEPARTMENT VALVE AND FIRE EXTINGUISHER CABINETS																			
	5914		**5924**		**5934**		**5944**		**5954**	Trimless W Shelf	16"	40"	8-3/4"	18-1/4"	42-1/4"	17"	41"	9"	2-1/2" Fire Department Valve & Fire Extinguisher . Shelf located 12" Above Bottom