SUBMITTAL: 1400 LIFESTART® SERIES AED CABINET—BRONZE & BRASS

Our 1400 Series in Bronze and Brass Complements your Building Décor. Protect valuable Automated External Defibrillators (AED's) with durable Lifestart cabinets. Each cabinet is equipped with a 85 dB door alarm to deter tampering.

Trim Construction: Bronze (US10 Satin or US10B Satin Oil-Rubbed), Brass (US3 Polished).

Door: Bronze or brass formed door, mounted in a 5/8" door stop with pull handle of material matching the finish, roller catch and continuous hinge. Theft -deterrent SAF-T-LOK™ available.

Alarm: 85 db Commander (audible) alarm standard with keyed on/off switch on the door.

Trim Style & Depth: *Recessed* – 3/8" flat trim, *Semi*-Recessed – 1-1/2" square edge, *Surface-Mount* square edge.

Tub: White powder-coated CRS, or matching material for surface-mount models. Fire-rated available - See Separate Submittal

1486F12 Semi-Recessed Cabinet US10B Finish and Silkscreen Graphic

STEP 1: SELECT MODEL NUMBER AND QUANTITY ON CHART (refer to chart on page 2)

A. Determine Trim Style according to wall depth. **B.** Determine Tub I.D. according to size most suited for AED and wall opening.

STEP 2: SELECT DOOR STYLE Check one box below

- ☐ **F** Full Glazing
- ☐ **G** Full Glazing with SAF-T-LOK
- ☐ **V** Vertical Duo
- ☐ **W** Vertical Duo with SAF-T-LOK
- ☐ **S21** Solid Door
- ☐ **L22** Solid Door with SAF-T-LOK

STEP 3: SELECT GLAZING Check one box below

☐ **12** Clear Acrylic with Red Lettering (Std) ☐ **11** Clear Acrylic with Black Lettering ☐ **17** Tempered

Note: *Only F12, F11, G12 and G11 have large AED Heart Silk Screen Graphics - All Others Include Lettering as Shown Below*

1445F12 Recessed Cabinet US10 Satin Bronze Finish and Silkscreen Graphic

STEP 4: SELECT OPTIONAL FEATURES AT ADDITIONAL COST:

- ☐ **(SA)** Siren Strobe Alarm and 110 dB Alarm (3" Trim Models Only)
- ☐ **(STC)** Saf-T-Clasp for Visual Notification When Door has been opened
- ☐ **(14MAG)** Magnetic Door Contact for Existing Alarm Systems
- ☐ **(14RR)** Roller Reed Ball Contact for Existing Alarm Systems
- ☐ US9 Bright Polished Door & Trim. (Pull of Matching Material)
- ☐ US4 Satin Brass Door & Trim (Pull of Matching Material)

Examples of Brass & Bronze Finishes can be Viewed on our Website

- ☐ Wall Signs:__ Flat __ Tent __ Rt Angle __Bi-Lingual __ Directional (See separate submittal for more details on these plastic signs)
- ☐ Lettering: Etched or Silkscreen on Glass, Custom Vinyl

Check above box and attach separate submittal to order

Custom Door Graphics - company logos, photos, etc. Contact C.S

Automated External Defibrillator sold separately - see website

It is the responsibility of the customer to communicate specifications and product performance requirements that are needed for their application. This document is intended to convey potential product configurations and offerings. It is not to be used to imply or represent a specification or rating, of finished products shipped. Detailed, specific submittals can be created upon request. It is the responsibility of the customer to specify product accordingly to comply with local laws, codes, and ordinances.

JL INDUSTRIES

800-554-6077

sales@activarcpg.com

www.activarcpg.com

9702 Newton Av S. Bloomington, MN 55431 | Many Locations Nationwide

Distributor:		Project:
Contractor:		Approved By:
Date:	Quantity:	Architect:
Scale: N/A	Pages: 1 of 2	Item #

@ 2024 Activar Construction Products Group, Inc.

The information contained in this document is the sole property of Activar Construction Products Group, Inc. Any reproduction in part of as a whole without the written permission of Activar Construction Products Group, Inc. is prohibited.

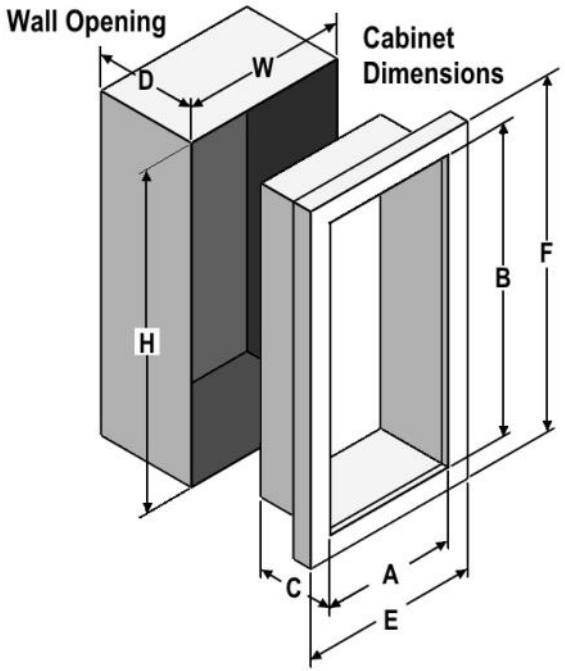

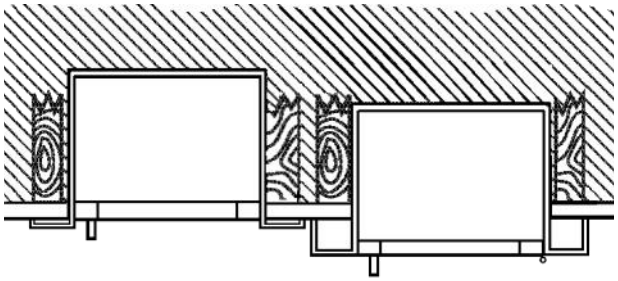

3/8" Flat Trim **1-1/2" Square Trim**

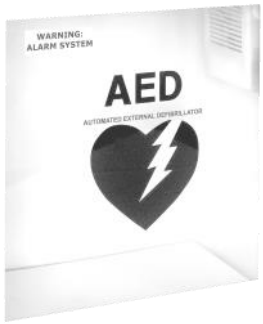

Clear Acrylic with Black Lettering

AED die cut (1-1/4" x 5-3/8) and Warning decal (3/4" x 3-1/2") included with all cabinets except F12 and G12

WARNING
ALARM SYSTEM

TRIM & DOOR MATERIAL & SERIES #							TUB I.D.			FRAME O.D.		WALL OPENING NON-RATED		
QTY	BRONZE US10	QTY	BRONZE US10B	QTY	BRASS US3	TRIM STYLE	A	B	C	E	F	W	H	D
	1445		1485		1455	Flat Trim	14"	14"	6-3/4"	17-3/8"	17-3/8"	15-1/4"	15-1/4"	6-5/8"
	1446		1486		1456	1-1/2" Square Trim	14"	14"	6-3/4"	17-3/8"	17-3/8"	15-1/4"	15-1/4"	5-3/8"
	1443		1483		1453	Surface-Mount Sq.	17-3/16"	17-3/16"	7"	17-3/8"	17-3/8"	—	—	—

@2023 Activar Construction Products Group, Inc. THE INFORMATION CONTAINED IN THIS DRAWING IS THE SOLE PROPERTY OF ACTIVAR CONSTRUCTINO PRODUCTS GROUP, INC.
ANY REPRODUCTION IN PART OR AS A WHOLE WITHOUT THE WRITTEN PERMISSION OF ACTIVAR CONSTRUCTION PRODUCTS GROUP, INC IS PROHIBITED