SUBMITTAL: 1400 FIRE-FX2™ LIFESTART™ FIRE-RATED AED CABINET BRONZE & BRASS

Our 1400 Series in Bronze and Brass Complements your Building Décor. Protect valuable Automated External Defibrillators (AED's) with durable Lifestart cabinets. Each cabinet is equipped with a 85 dB door alarm to deter tampering.

Trim Construction: Bronze (US10 or US10B), brass (US3).
Door: Bronze or brass formed door, mounted in a 5/8" door stop, pull handle of material matching the finish, roller catch and continuous hinge. Theft-deterrent SAF-T-LOK™ available.
Alarm: 85 dB Commander (audible) alarm standard with keyed on/off switch on the door.
Trim Style & Depth: *Recessed* – 3/8" flat trim *or Semi*-Recessed – 1-1/2" square edge. All models meet 4" maximum ADA projection requirement.
Tub: White powder-coated cold rolled steel. Fire-resistant material is attached to the exterior of the tub.

Fire Rating: Fire-FX2™ cabinets are UL listed and labeled as an approved membrane penetration firestop system for up to 2 hours in accordance with UL 1479 (ASTM-E814) and CAN/ULC-S115, when properly installed in a wall assembly according to installation instructions.

1486F12FX2 Semi-Recessed Cabinet with US10B Finish and Silkscreen Graphics

STEP 1: SELECT MODEL NUMBER AND QUANTITY ON CHART (refer to chart on page 2)
A. Determine Trim Style according to wall depth. **B.** Determine Tub I.D. according to size most suited for AED and wall opening.

STEP 2: SELECT DOOR STYLE Check one box below

- ☐ **F** Full Glazing
- ☐ **G** Full Glazing with SAF-T-LOK
- ☐ **V** Vertical Duo
- ☐ **W** Vertical Duo with SAF-T-LOK
- ☐ **S21** Solid Door
- ☐ **L22** Solid Door with SAF-T-LOK

STEP 3: SELECT GLAZING Check one box below

☐ **12** Clear Acrylic with Red Lettering (Std) ☐ **11** Clear Acrylic with Black Lettering ☐ **17** Tempered

Note: *Only F12, F11, G12 and G11 have large AED Heart Silk Screen Graphics - All Others Include Lettering as Shown Below*

STEP 4: SELECT OPTIONAL FEATURES AT ADDITIONAL COST:

- ☐ **(STC)** Saf-T-Clasp for Visual Notification When Door has been opened
- ☐ **(14MAG)** Magnetic Door Contact for Existing Alarm Systems
- ☐ **(14RR)** Roller Reed Ball Contact for Existing Alarm Systems
- ☐ US9 Bright Polished Door & Trim. (Pull of Matching Material)
- ☐ US4 Satin Brass Door & Trim (Pull of Matching Material)

Examples of Brass & Bronze Finishes can be Viewed on our Website

- ☐ Wall Signs:__ Flat __ Tent __ Rt Angle __ Bi-Lingual __ Directional
(See separate submittal for more details on these plastic signs)
- ☐ Lettering: Etched or Silkscreen on Glass, Custom Vinyl
Check above box and attach separate submittal to order
Custom Door Graphics - company logos, photos, etc. Contact C.S
Automated External Defibrillator sold separately - see website

1445F12FX2 Fully-Recessed Cabinet with US10 Satin Bronze Finish and Silkscreen Graphics

AED die cut (1-1/4" x 5-3/8) and Warning decal (3/4" x 3-1/2") included with all cabinets except F12 and G12. (shown at right)

#14DC-AED

WARNING
ALARM SYSTEM

#14DC-WAS

JL INDUSTRIES
800-554-6077
sales@activarcpg.com
www.activarcpg.com
9702 Newton Av S. Bloomington, MN 55431 | Many Locations Nationwide

Distributor:		Project:
Contractor:		Approved By:
Date:	Quantity:	Architect:
Scale: N/A	Pages: 1 of 2	Item #

@ 2024 Activar Construction Products Group, Inc.
THE INFORMATION CONTAINED IN THIS DOCUMENT IS THE SOLE PROPERTY OF ACTIVAR CONSTRUCTION PRODUCTS GROUP, INC. ANY REPRODUCTION IN PART OF AS A WHOLE WITHOUT THE WRITTEN PERMISSION OF ACTIVAR CONSTRUCTION PRODUCTS GROUP, INC. IS PROHIBITED.

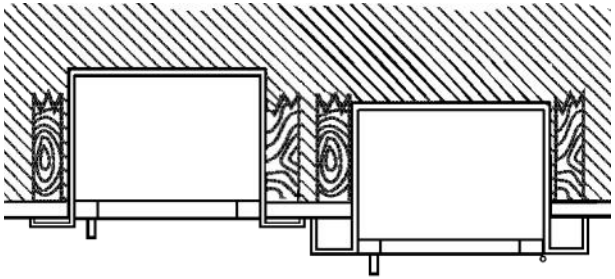

3/8” Flat Trim **1-1/2” Square Trim**

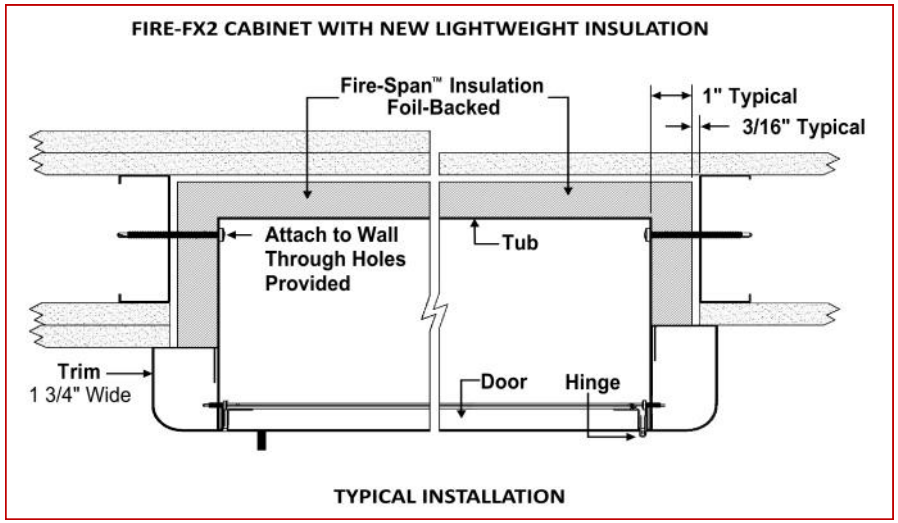

Double Wall Construction with Fire-Resistant Liner Shown Above

Lightweight Insulation

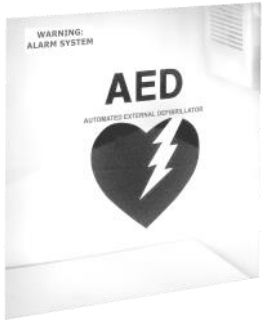

Clear Acrylic with Black Lettering

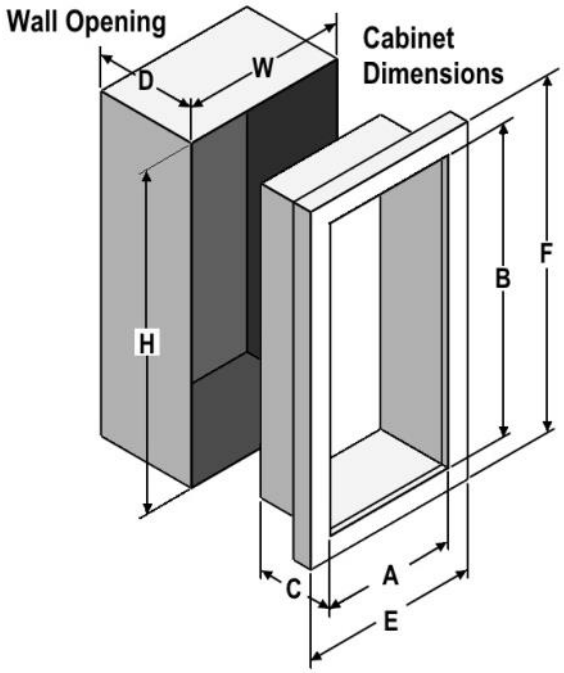

TRIM & DOOR MATERIAL & SERIES #							TUB I.D.			FRAME O.D.		FX Fire-Rated Wall Opening		
QTY	BRONZE US10	QTY	BRONZE US10B	QTY	BRASS US3	TRIM STYLE	A	B	C	E	F	W	H	D
	1445FX2		1485FX2		1455FX2	3/8”Flat Trim	14"	14"	6-3/4"	17-3/8"	17-3/8"	16-5/16”	16-5/16”	7-3/4”
	1446FX2		1486FX2		1456FX2	1-1/2" Square Trim	14"	14"	6-3/4"	17-3/8"	17-3/8"	16-5/16”	16-5/16”	7-1/8”

It is the responsibility of the customer to communicate specifications and product performance requirements that are needed for their application. This document is intended to convey potential product configurations and offerings. It is not to be used to imply or represent a specification or rating, of finished products shipped. Detailed, specific submittals can be created upon request. It is the responsibility of the customer to specify product accordingly to comply with local laws, codes, and ordinances.

@2024 Activar Construction Products Group, Inc. THE INFORMATION CONTAINED IN THIS DRAWING IS THE SOLE PROPERTY OF ACTIVAR CONSTRUCTINO PRODUCTS GROUP, INC.
ANY REPRODUCTION IN PART OR AS A WHOLE WITHOUT THE WRITTEN PERMISSION OF ACTIVAR CONSTRUCTION PRODUCTS GROUP, INC IS PROHIBITED