SUBMITTAL: 1400 FIRE-FX2™ LIFESTART™ FIRE-RATED AED CABINET

Protect valuable Automated External Defibrillators (AED's) with durable Lifestart cabinets. Each cabinet is equipped with a 85 dB door alarm to deter tampering. This series in steel, stainless steel or aluminum fits most AED's on the market.

Frame, Trim and Door: #4 brushed stainless steel, clear anodized aluminum or steel with white powder-coat finish. 5/8" door stop and continuous hinge.
Trim Style & Depth: *Recessed* – 3/8" flat trim*; Semi*-Recessed – 1-1/2" square edge; 3 or 4" rolled edge (4" has recessed pull).
Door: Formed door with zinc-plated handle and roller catch for F and S21 models. Theft-deterrent SAF-T-LOK™ available on G and L22 models.
Tub: White powder-coated steel. Fire-resistant material is attached to the exterior of the tub.
Alarm: 85 dB Commander (audible) alarm standard with keyed on/off switch on the door.

Fire Rating: Fire-FX2™ cabinets are UL listed and labeled as an approved membrane penetration firestop system for up to 2 hours in accordance with UL 1479 (ASTM-E814) and CAN/ULC-S115, when properly installed in a wall assembly according to installation instructions.

1417F12FX2 Semi-Recessed Cabinet with 3" Rolled Trim & Silkscreen AED Graphic

STEP 1: SELECT MODEL NUMBER AND QUANTITY ON CHART (refer to chart on page 2)
A. Determine Trim Style according to wall depth. **B.** Determine Tub I.D. according to size most suited for contents and wall opening..

STEP 2: SELECT DOOR STYLE Check one box below

- ☐ **F** Full Glazing
- ☐ **G** Full Glazing with SAF-T-LOK
- ☐ **V** Vertical Duo
- ☐ **W** Vertical Duo with SAF-T-LOK
- ☐ **S21** Solid Door
- ☐ **L22** Solid Door with SAF-T-LOK

STEP 3: SELECT GLAZING Check one box below

☐ **12** Clear Acrylic with Red Lettering (Std) ☐ **11** Clear Acrylic with Black Lettering ☐ **17** Tempered

Note: *Only F12, F11, G12 and G11 have large AED Heart Silk Screen Graphics - All Others Include Lettering as Shown Below*

STEP 4: SELECT OPTIONAL FEATURES AT ADDITIONAL COST

- ☐ **(SA)** Siren Strobe Alarm 110 dB Alarm (3" & 4" Trim Models Only)
- ☐ **(STC)** Saf-T-Clasp for Visual Notification When Door has been opened
- ☐ **(14MAG)** Magnetic Door Contact for Existing Alarm Systems
- ☐ **(14RR)** Roller Reed Ball Contact for Existing Alarm Systems
- ☐ Optional Dark Bronze Anodized Aluminum Finish (Pulls painted to match)
- ☐ Optional Stainless Steel Finishes ___ #6 ___ #7 View Finishes Online
- ☐ Optional Tub Color: ___ Black ___Red
- ☐ Optional Stainless Tub for Stainless Trim Models
- ☐ **(PRH)** Flush Pull Handle (Includes AED die cut and decal shown below)
- ☐ **(PUCH)** Polished Chrome Handle

- ☐ Optional Color: _____ See page 2 for colors.
- ☐ Wall Signs:__ Flat __ Tent __ Rt Angle __Bi-Lingual __ Directional (See separate submittal for more details on these plastic signs)
- ☐ Etched, Silkscreen or Engraved Lettering - Check here and attach separate submittal

Custom Door Graphics - company logos, photos - Contact Cust. Service
Bronze or Brass Finish - See separate submittal on website.
Automated External Defibrillator sold separately - see website
See website for more information on the above options.

1435F12FX2 Fully-Recessed Stainless Steel Cabinet with Flat Trim & Silkscreen AED Graphic

AED die cut (1-1/4" x 5-3/8) and Warning decal (3/4" x 3-1/2") included with all cabinets except F12 and G12:

#14DC-AED

WARNING
ALARM SYSTEM

#14DC-WAS

JL INDUSTRIES
800-554-6077
sales@activarcpg.com
www.activarcpg.com
9702 Newton Av S. Bloomington, MN 55431 | Many Locations Nationwide

Distributor:		Project:
Contractor:		Approved By:
Date:	Quantity:	Architect:
Scale: N/A	Pages: 1 of 2	Item #

@ 2024 Activar Construction Products Group, Inc.
THE INFORMATION CONTAINED IN THIS DOCUMENT IS THE SOLE PROPERTY OF ACTIVAR CONSTRUCTION PRODUCTS GROUP, INC. ANY REPRODUCTION IN PART OF AS A WHOLE WITHOUT THE WRITTEN PERMISSION OF ACTIVAR CONSTRUCTION PRODUCTS GROUP, INC. IS PROHIBITED.

SUBMITTAL: 1400 FIRE-FX2™ LIFESTART™ FIRE-RATED AED CABINET

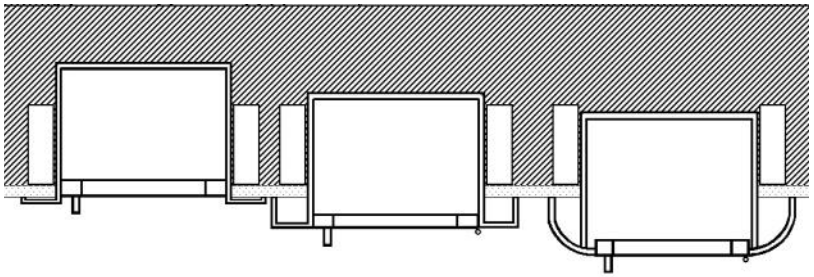

3/8" Flat Trim | 1-1/2" Square | 2-1/2, 3" or 4" Rolled Edge

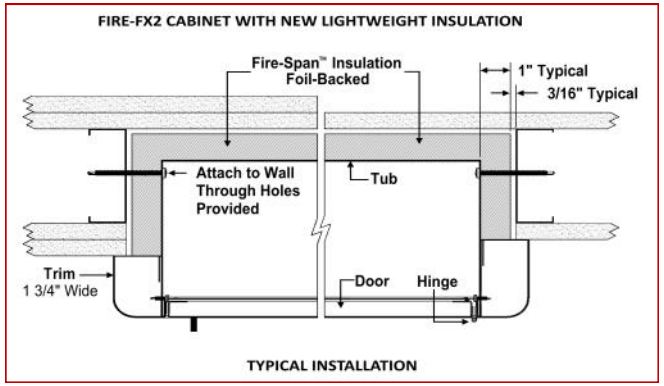

Lightweight Insulation

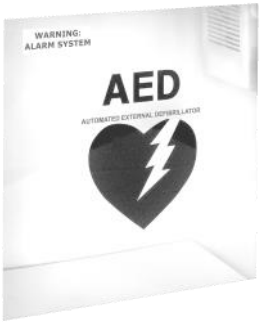

Clear Acrylic with Black Lettering

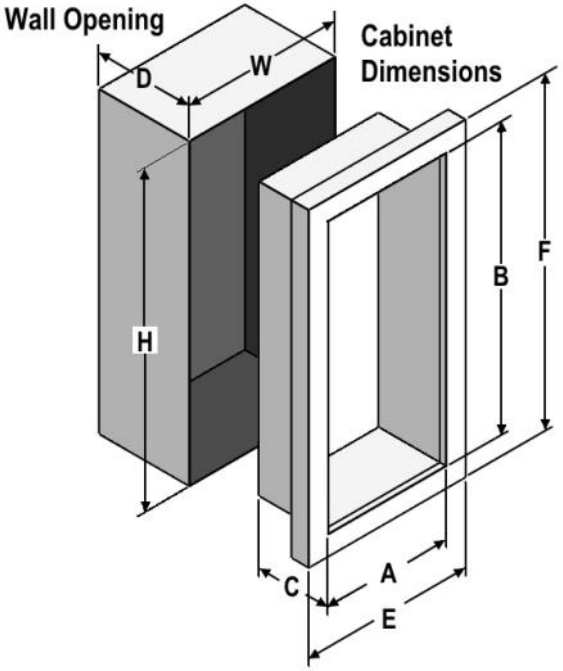

TRIM & DOOR MATERIAL & SERIES #							TUB I.D.			FRAME O.D.		FIRE-RATED WALL OPENING		
QTY	STEEL	QTY	ALUMINUM	QTY	STAINLESS STEEL	TRIM STYLE	A	B	C	E	F	W	H	D
	1415__FX2		1425__FX2		1435__FX2	3/8"Flat Trim	14"	14"	6-3/4"	17-3/8"	17-3/8"	16-5/16"	16-5/16"	7-3/4
	1416__FX2		1426__FX2		1436__FX2	1-1/2" Square Trim	14"	14"	6-3/4"	17-3/8"	17-3/8"	16-5/16"	16-5/16"	7-1/8
	1417__FX2		--		1437__FX2	3" Rolled Trim	14"	14"	6-3/4"	17-3/8"	17-3/8"	16-5/16"	16-5/16"	5
	--		1427__FX2		--	2 1/2" Rolled Trim	14"	14"	6-3/4"	17-3/8"	17-3/8"	16-5/16"	16-5/16"	6-1/8
	1412__FX2		--		1432__FX2	4" Rolled Trim/Recessed Pull	14"	14"	6-3/4"	17-3/8"	17-3/8"	16-5/16"	16-5/16"	4-1/8
	--		1422__FX2		--	4" Rolled Trim/Recessed Pull	14"	14"	6-3/4"	17-3/8"	17-3/8"	16-5/16"	16-5/16"	5-7/8

It is the responsibility of the customer to communicate specifications and product performance requirements that are needed for their application. This document is intended to convey potential product configurations and offerings. It is not to be used to imply or represent a specification or rating, of finished products shipped. Detailed, specific submittals can be created upon request. It is the responsibility of the customer to specify product accordingly to comply with local laws, codes, and ordinances.

@2024 Activar Construction Products Group, Inc.

THE INFORMATION CONTAINED IN THIS DRAWING IS THE SOLE PROPERTY OF ACTIVAR CONSTRUCTINO PRODUCTS GROUP, INC.
ANY REPRODUCTION IN PART OR AS A WHOLE WITHOUT THE WRITTEN PERMISSION OF ACTIVAR CONSTRUCTION PRODUCTS GROUP, INC IS PROHIBITED